Department of the Interior
U.S. Geological Survey

USGS LANDSAT DATA CONTINUITY MISSION (LDCM) DATA PROCESSING AND ARCHIVE SYSTEM (DPAS) OPERATIONS CONCEPT DOCUMENT (OCD)

Version 1.0

September 2009

science for a changing world

Executive Summary

The Landsat Data Continuity Mission (LDCM) is a remote sensing mission, which provides data continuity to the Landsat satellite series global multi-spectral data collection and distribution. The LDCM is a satellite and ground based capabilities collection that provides:

- Global, moderate-resolution, multi-spectral data collection.
- Long term LDCM data archiving.
- Web-enabled access.
- Continued Landsat International Cooperators (IC) support.
- Level 0 (L0) and Level 1 (L1) data products.

The LDCM Project consists of three major mission components: the Space Segment (SS), Ground Segment (GS), and Launch Services Segment (LSS). Since LDCM is a cooperative effort between National Aeronautics and Space Administration (NASA) and the United States Geological Survey (USGS), each agency has specific responsibilities for delivery of major overall mission capabilities. The Data Processing and Archive System (DPAS) is part of the LDCM GS.

The DPAS OCD addresses the LDCM and describes the DPAS characteristics, presents the operational concepts, functions, and interactions.

Document History

Document Number	Document Version	Publication Date	Change Number
LDCM-OCD-007	1.0	September 2009	

Contents

Executive Summary ..... **ii**
Document History ..... **iii**
Contents ..... **iv**
List of Figures **1**
Section 1 Introduction **2**
1.1 Background 2
1.2 Purpose & Scope 3
1.2.1 Document Organization 3
1.3 References 3
1.3.1 Applicable Documents 3
1.3.2 Reference Documents 3
Section 2 System Inputs and Outputs **5**
2.1 Major Inputs 5
2.1.1 Block Address Data (BAD) 5
2.1.2 Digital Elevation Model (DEM) 5
2.1.3 Ground Control Point (GCP) 5
2.1.4 Interval Definition File (IDF) 5
2.1.5 Mission Data 5
2.1.6 UTC/UT1/Pole Wander 5
2.2 Major Outputs 6
2.2.1 Bias Parameter File (BPF) 6
2.2.2 Bulk Metadata 6
2.2.3 Cal Product 6
2.2.4 Calibration Parameter File (CPF) 6
2.2.5 Characterization Data 6
2.2.6 Full Resolution Browse (FRB) 7
2.2.7 L0Ra 7
2.2.8 L0Rp 7
2.2.9 L1Gt 7
2.2.10 L1T 7
2.2.11 Quality Band (QB) 8
2.2.12 Reduced Resolution Browse (RRB) 8
2.2.13 Response Linearization Look Up Table (RLUT) 8
2.2.14 Shutter (L0Ra) 8
Section 3 LDCM Data Processing and Archive System Overview **9**
3.1 Subsystem Descriptions 12
3.1.1 Storage and Archive (SA) Subsystem 12
3.1.2 Ingest Subsystem 15
3.1.3 Mission Management Office (MMO) Database Subsystem (MDS) 18
3.1.4 Image Assessment Subsystem (IAS) 20
3.1.5 Level 1 Product Generation Subsystem (LPGS) 22
3.1.6 User Portal Subsystem (UP Subsystem) 24
3.1.7 Subsetter Subsystem 26

3.1.8 Inventory Subsystem ... 29
3.2 Priority Processing ... 31
Section 4 Data Processing and Archive System (DPAS) Operations ... 33
4.1 Data Processing, Archive, and Distribution Operations ... 33
4.1.1 Operations Facility Layout ... 33
4.1.2 Day In The Life (DITL) Overview ... 34
4.2 Operational Roles ... 35
4.2.1 Data Processing and Archive System (DPAS) Operators ... 35
4.2.2 Data Management Personnel ... 35
4.2.3 Software Developers ... 35
4.2.4 System Engineers ... 35
4.2.5 System Administrators ... 35
4.2.6 Hardware Engineers ... 35
4.2.7 Database Administrators ... 35
4.2.8 Calibration/Validation (Cal/Val) Analysts ... 35
4.2.9 Data Quality Analyst (DQA) ... 36
4.2.10 International Cooperators (ICs) ... 36
4.2.11 Mission Management Office (MMO) ... 36
Section 5 Scenarios ... 37
5.1 Scenario Conventions ... 37
5.2 Standard Processing ... 38
5.2.1 Ingest Subsystem Mission Data ... 39
5.2.2 Standard Product Generation ... 41
5.2.3 Browse Generation ... 43
5.3 On-Demand Processing ... 44
5.4 Mission Data Reprocessing ... 46
5.5 Data Management ... 48
5.5.1 Archive Management ... 48
5.5.2 Storage Management ... 50
5.5.3 Data Manager Interaction ... 51
5.6 Reporting (MDS) ... 53
5.6.1 Metrics Reporting ... 53
5.6.2 Collection Reconciliation ... 54
5.7 User Portal Subsystem ... 55
5.7.1 Registration ... 55
5.7.2 Search & Order ... 56
5.7.3 Information Dissemination ... 58
5.7.4 Collection Request ... 60
5.8 Calibration Validation Operations ... 62
5.8.1 Calibration/Validation (Cal/Val) Processing ... 62
5.8.2 Calibration Parameter Generation ... 64
5.9 International Cooperators (ICs) ... 66
5.9.1 Exchange & Validation Data Ingest Subsystem ... 66
5.9.2 Exchange Data Processing ... 67
5.9.3 Validation Data Processing ... 68
5.9.4 Exchange Data Distribution ... 70

5.9.5 Metadata Ingest Subsystem 72
5.10 Anomaly Resolution 73
5.10.1 Ingest Subsystem Error Recovery 73
5.10.2 Product Generation Error Recovery 75
5.11 Continuity of Operations 76
5.11.1 Data Recovery 76
5.11.2 System Recovery 78
5.11.3 Routine Backups 80
Appendix A Acronyms 81
Appendix B Requirement to Scenario Trace 84

List of Figures

Figure 1 LDCM Operations Concept 9
Figure 2 DPAS Block Diagram 10
Figure 3 DPAS Context Diagram 11
Figure 4 Storage and Archive Subsystem Block Diagram 13
Figure 5 Storage and Archive Subsystem Context Diagram 14
Figure 6 Ingest Subsystem Block Diagram 16
Figure 7 Ingest Subsystem Context Diagram 17
Figure 8 MDS Block Diagram 18
Figure 9 MDS Context Diagram 19
Figure 10 IAS Block Diagram 20
Figure 11 IAS Context Diagram 21
Figure 12 LPGS Block Diagram 22
Figure 13 LPGS Context Diagram 23
Figure 14 UP Subsystem Block Diagram 24
Figure 15 UP Subsystem Context Diagram 25
Figure 16 Subsetter Subsystem Block Diagram 27
Figure 17 Subsetter Subsystem Context Diagram 28
Figure 18 Inventory Subsystem Block Diagram 29
Figure 19 Inventory Subsystem Context Diagram 30
Figure 20 Priority Processing 31
Figure 21 Operations Facility Layout 33
Figure 22 Day In The Life (DITL) Timeline 34
Figure 23 DPAS Scenario Conventions 37
Figure 24 Standard Processing Data Flows 38
Figure 25 Ingest Subsystem Mission Data 39
Figure 26 Standard Product Generation 41
Figure 27 Browse Generation 43
Figure 28 On-Demand Processing 44
Figure 29 Mission Data Reprocessing 46
Figure 30 Archive Management 48
Figure 31 Storage Management 50
Figure 32 Data Manager Interaction 51
Figure 33 Metrics Reporting 53
Figure 34 Collection Reconciliation 54
Figure 35 Registration 55
Figure 36 Search & Order 56
Figure 37 Information Dissemination 58
Figure 38 Collection Request 60
Figure 39 Cal/Val Processing 62
Figure 40 Calibration Parameter Generation 64
Figure 41 Exchange & Validation Data Ingest Subsystem 66
Figure 42 Validation Data Processing 68
Figure 43 Exchange Data Distribution 70
Figure 44 Metadata Ingest Subsystem 72

Figure 45 Ingest Subsystem Error Recovery 73
Figure 46 Product Generation Error Recovery 75
Figure 47 Data Recovery 76
Figure 48 System Recovery 78
Figure 49 Routine Backups 80

Section 1 Introduction

The Landsat Data Continuity Mission (LDCM) is a joint mission between the National Aeronautics and Space Administration (NASA) and the United States Geological Survey (USGS). The LDCM is a remote sensing mission providing coverage of the Earth's land surfaces. This mission continues the 30+ years of global data collection and distribution provided by the Landsat series of satellites.

1.1 Background

The goal of the LDCM is continue the collection, archive, and distribution of multi-spectral imagery affording global, synoptic, and repetitive coverage of the Earth land surfaces at a scale where natural and human-induced changes can be detected, differentiated, characterized, and monitored over time. The LDCM goal compliments and adheres to the Landsat programmatic goals stated in the United States Code (USC) Title 15, Chapter 82 "Land Remote Sensing Policy" (derived from the Land Remote Sensing Policy Act of 1992). This policy requires that the Landsat program provide data into the future which is sufficiently consistent with previous Landsat data allowing global land surface change detection and quantitative characterization. The LDCM was conceived as a follow-on mission to the highly successful Landsat mission series which have provided satellite coverage of the Earth continental surfaces since 1972. The data from the missions constitutes the longest continuous record of Earth surfaces as seen from space.

The LDCM ensures that Landsat-like data will be provided to the USGS National Satellite Land Remote Sensing Data Archive (NSLRSDA) for a 10 year mission life. A 10 year requirement provides a 5 year nominal mission lifetime with an additional 5 years as a risk mitigation against delays in future missions.

The DPAS OCD is one part of the LDCM Ground System OCD, which in turn, is part of the overall LDCM Operations Concept (Mission OCD). This hierarchy reflects the operational concepts that correspond to a relative "level" of requirements, which directly relate to a level of detail. The Mission OCD traces its concepts to the Science & Mission Requirements Document (SMRD), the GS OCD to the Ground System Requirements Document (GSRD), and the DPAS OCD to the DPAS Requirements Document (DPAS RD). As shown in Figure 1, the DPAS is part of the overall Ground System, which in turn, is part of the overall mission. Functional decomposition and requirements traceability within this hierarchy ensures that overall mission requirements and concepts are captured at the lower levels, specifically the GS OCD, and in turn the DPAS OCD. Appendix B of this document contains a scenario to requirement traceability matrix, which will form the basis of test case development for formal qualification testing.

1.2 Purpose & Scope

The primary purpose of the DPAS OCD is to provide a description of the planned functions and operations of the systems, people, and processes that comprise the DPAS. The OCD presents a functional view of the DPAS and operations based on high level LDCM program guidance, and requirements. In this way, the DPAS OCD also aids in the development and validation of the DPAS requirements by facilitating test plan development.

The OCD scope includes all functions associated with the DPAS as well as the external entities that interact with the DPAS.

1.2.1 Document Organization

This document is organized as follows:

- Section 1 Describes the purpose, objectives, and document content.
- Section 2 Provides descriptions of the major inputs and outputs of the DPAS
- Section 3 Presents an overview of the DPAS and its Subsystems.
- Section 4 Presents an overview of DPAS Operations, including operational roles.
- Section 5 Presents the DPAS operational scenarios.
- Appendix A Provides descriptions for acronyms used in the document.
- Appendix B Provides a DPAS requirement to DPAS scenario traceability matrix.

1.3 References

1.3.1 Applicable Documents

The applicable documents listed below form a portion of this document. The listed documents carry the same weight as if stated within the body of this document.

- Landsat Data Continuity Mission (LDCM) Science and Mission Requirements Document, GSFC 427-02-01
- Landsat Data Continuity Mission (LDCM) Ground System (GS) Requirements Document, LDCM-REQ-001
- Landsat Data Continuity Mission (LDCM) Ground System (GS) Interface Requirements Document, LDCM-REQ-011
- USGS Landsat Data Continuity Mission (LDCM) Data Processing and Archive System (DPAS) Requirements Document (RD), LDCM-REQ-015
- USGS Landsat Data Continuity Mission (LDCM) Data Processing and Archive System (DPAS) Interface Requirements Document (DPAS N2), LDCM-REQ-016

1.3.2 Reference Documents

The reference documents listed below are part of this document and serve to document content portions.

- LDCM Operations Concept Document, GSFC 427-02-02
- Landsat Data Continuity Mission (LDCM) Ground System (GS) Operations Concept Document, LDCM-OCD-002

- Landsat Data Continuity Mission (LDCM) Major Application Contingency Plan, LDCM-SEC-006
- Landsat Data Continuity Mission (LDCM) Ground System (GS) Lexicon, LDCM-REF-010
- USGS Landsat Data Continuity Mission (LDCM) Service-Level Agreement (SLA) Between the LDCM Project and the Long-Term Archive (LTA) Project for EROS-Supplied Services for the EarthExplorer Redesign, LDCM-REF-019
- USGS Landsat Data Continuity Mission (LDCM)/Long Term Archive (LTA) CR#1 Mass Storage System Service Level Agreement (SLA), LDCM-REF-020

Section 2 System Inputs and Outputs

2.1 Major Inputs

This section describes the major system inputs and outputs of the DPAS. The data types are summarily described, and this information is not intended to replace the LDCM GS Lexicon. For detailed and official information, the USGS LDCM Ground System Lexicon (LDCM-REF-010) should be consulted.

2.1.1 Block Address Data (BAD)

Block Address Data is a special type of collection that is manually commanded by the Flight Operations Team (FOT). BAD is also manually captured by Landsat Ground Network (LGN) stations. BAD is automatically transferred by DRCS to the Archive Cache, where it's stored and retrieved as needed for analysis, primarily by the LDCM observatory vendor.

2.1.2 Digital Elevation Model (DEM)

A digital representation of ground topography stored as a series of raster images that is used for terrain correction as part of L1 processing. For the DPAS, the Global Land Survey (GLS) and the Radarsat Antarctic Mapping Project (RAMP) DEM datasets will be used.

2.1.3 Ground Control Point (GCP)

A geographic feature of known location that is recognizable in images and can be used to determine geometric corrections to those images. For the DPAS, a collection of GCP "chips" will be loaded into the IAS database and specific portions (the chips) will be returned based on spatial queries, that will enable geometric corrections to the L1 products.

2.1.4 Interval Definition File (IDF)

The Interval Definition File (IDF) defines the set of Mission Data files belonging to a collection interval. The IDF contains a few descriptive parameters for the interval, the names of all of the Mission Data files, and (for appropriate collection types) the associated scenes. An IDF is generated by the GNE (DCRS) for each interval and delivered to the DPAS (Ingest Subsystem) along with the Mission Data. The IDF is also archived with the Mission Data. A complete interval plus IDF is the exchange format both to and from IC stations.

2.1.5 Mission Data

A Mission Data file is the file that is created as a result of processing everything down to and including the CFDP protocol in the X-band downlink. The framing of the Mission Data files is determined by the observatory.

Mission Data is provided to the DPAS by the GNE (DCRS).

2.1.6 UTC/UT1/Pole Wander

Universal Time (UT1)/Coordinate Universal Time (UTC) and Pole Wander are extracted from the United States Naval Observatory (USNO) and are used in the development of Calibration Parameters (CP). UT1/UTC are used for time corrections which occur because of the need to

synchronize the observatory and earth times. Similarly, Pole Wander information is used to correct for variances in earth rotation.

2.2 Major Outputs

2.2.1 Bias Parameter File (BPF)

The BPF supplies radiometric correction parameters required during L1 processing of OLI Earth image and calibration data products. Specifically, the BPF provides estimates of pre- and post-acquisition bias levels for all operable detectors in all bands. For the short wave infrared (SWIR) bands, the BPF also provides, for all operable detectors, a set of coefficients that can be used to estimate per-frame bias levels as a polynomial function of the average blind detector response for the given band and SCA.

Bias Parameters (BP) are created by the Ingest Subsystem and kept in the Image Assessment Subsystem (IAS) database. When requested, the parameters are output to a file and form the BPF.

2.2.2 Bulk Metadata

Bulk metadata refers to a large volume of Searchable Inventory Subsystem Database (SID) records, which occurs either as a result of a query, or as information provided by an International Cooperator to indicate their data holdings. Bulk metadata is also available to researchers who want to perform analytical processing on data holdings within their area of interest.

2.2.3 Cal Product

Cal Products are created by the IAS as specified by the CVT. Unlike standard products, which are distributed to the user community, Cal products are special order products, defined by parameters and/or process flow, for a specific research need by the CVT. An example is a L1 product with non-UTM projection.

2.2.4 Calibration Parameter File (CPF)

The Calibration Parameter File (CPF) contains all parameters needed to derive the L0Rp, L1Gt, and L1T products from L0Ra data. Example parameters contained within the CPF include: radiometric conversion coefficients, radiometric artifact correction parameters, Earth constants, orbit parameters, detector positions, and alignment parameters.

Calibration Parameters are created by the CVT and kept in the IAS database. When requested, the parameters are output to a file and form the CPF.

2.2.5 Characterization Data

Characterization data is a set of measurements that are output during the processing of L1 and Shutter (L0Ra) data by the LPGS, IAS, and Ingest Subsystem. The measurement information is analyzed and tracked over time in order to describe the performance of the OLI and TIRS instruments, including stability, and error rates.

2.2.6 Full Resolution Browse (FRB)

These are full spatial resolution browse derived from Level-1 products (L1Gt or L1T) and which have been rescaled from 16- to 8-bits per band. The OLI FRB will be comprised of 3 spectral bands (TBR); the TIRS FRB will be a single band (which band is also TBR).

FRBs are generated from L1 products by the User Portal Subsystem (UP Subsystem) Subsystem.

2.2.7 L0Ra

Level-0 Reformatted Archive (L0Ra) are image data with all data transmission and formatting artifacts removed, time provided, spatial, and band-sequentially ordered multi-spectral digital image data. L0Ra data is interval-based and stored in a format to allow for faster generation of L0Rp products.

L0Ra data is created from Mission Data by the Ingest Subsystem.

2.2.8 L0Rp

Level-0 Reformatted Product (L0Rp) are image data with all data transmission and formatting artifacts removed, time provided, spatial, and band-sequentially ordered multi-spectral digital image data. L0Rp are subsetted to the WRS-2 framing conventions.

L0Rp products are only available for the mix of instruments operating within the interval. If the interval was recorded with only a single instrument, then only that instrument will be present in the L0Rp product. If the interval consisted of data from both instruments, the L0Rp product will only be available with both instruments.

L0Rp *data* is created from the L0Ra data by the Subsetter Subsystem. L0Rp *products* are created by the Level 1 Product Generation System (LPGS). The distinction is that checksum generation and data packaging is performed for the product.

2.2.9 L1Gt

Level 1Gt data is systematically corrected data product that have been resampled for registration to a cartographic projection, referenced to the World Geodetic System 1984 (WGS84), G873 or current version. The geometric corrections incorporate the use of observatory ephemeris data; digital elevation model (DEM) data is used to correct for terrain relief.

L1Gt products are produced by the Level 1 Product Generation System (LPGS) when cloud cover or water prevents the use of precision terrain correction.

2.2.10 L1T

Level 1T data products consist of Level 1R data products resampled for registration to a cartographic projection, referenced to the WGS84, G873 or current version, orthorectified, and corrected for terrain relief. The geometric corrections use observatory ephemeris data and ground control points; DEM data is used to correct for terrain relief.

L1T products are produced by the LPGS.

2.2.11 Quality Band (QB)

The Quality Assessment Band or Quality Band (QB) will be created using OLI data, or OLI and TIRS data, for all sun-lit Earth acquisitions. The QB will be constructed by setting the bits according to specified image quality criteria. A 16-bit QB will available for the L1 data products, and an 8-bit version will be derived from the 16-bit version to allow mask overlay with the FRB.

16-bit QBs are generated during L1 processing by the LPGS, and 8-bit versions are generated by the User Portal Subsystem (UP Subsystem).

2.2.12 Reduced Resolution Browse (RRB)

These are "thumbnail" or subsampled browse that are derived from the Full Resolution Browse (FRB). The RRBs are generated by the User Portal Subsystem (UP Subsystem) Subsystem and provided to the Earth Explorer (EE) system and provde a "quick look" assessment capability during data searching by a user.

2.2.13 Response Linearization Look Up Table (RLUT)

The RLUT is an optional additional file that accompanies a CPF and contains a mapping look up table to linearize the output of the OLI detectors. This correction is used to increase the range of Digital Number (DN) values for preciseness and limit the number of saturated pixels to true saturations, and on the dark end, limit it to missing data. The RLUT is initially created by the Cal/Val Team (CVT) using the Cal/Val Tool Kit (CVTK), utilizing the characterization algorithm.

Non-linearity characterization uses a series of variable integration time observations of the solar diffuser and corresponding shutter observations to generate a remapping for every digital number (4096 values per detector) for every detector. This remapping will be performed via Look Up Table (LUT) approach though it could potentially be a function or possibly both.

The RLUT is created by the CVT and kept in the IAS database. When requested, the RLUT is output to file for use in L1 processing by the DPAS and ICs.

2.2.14 Shutter (L0Ra)

A special form of L0Ra data, Shutter data is OLI calibration data that is collected by using a shutter in front of the detectors before and after earth imaging collection. The data itself is used in the generation of Bias Parameters (BP).

Section 3 LDCM Data Processing and Archive System Overview

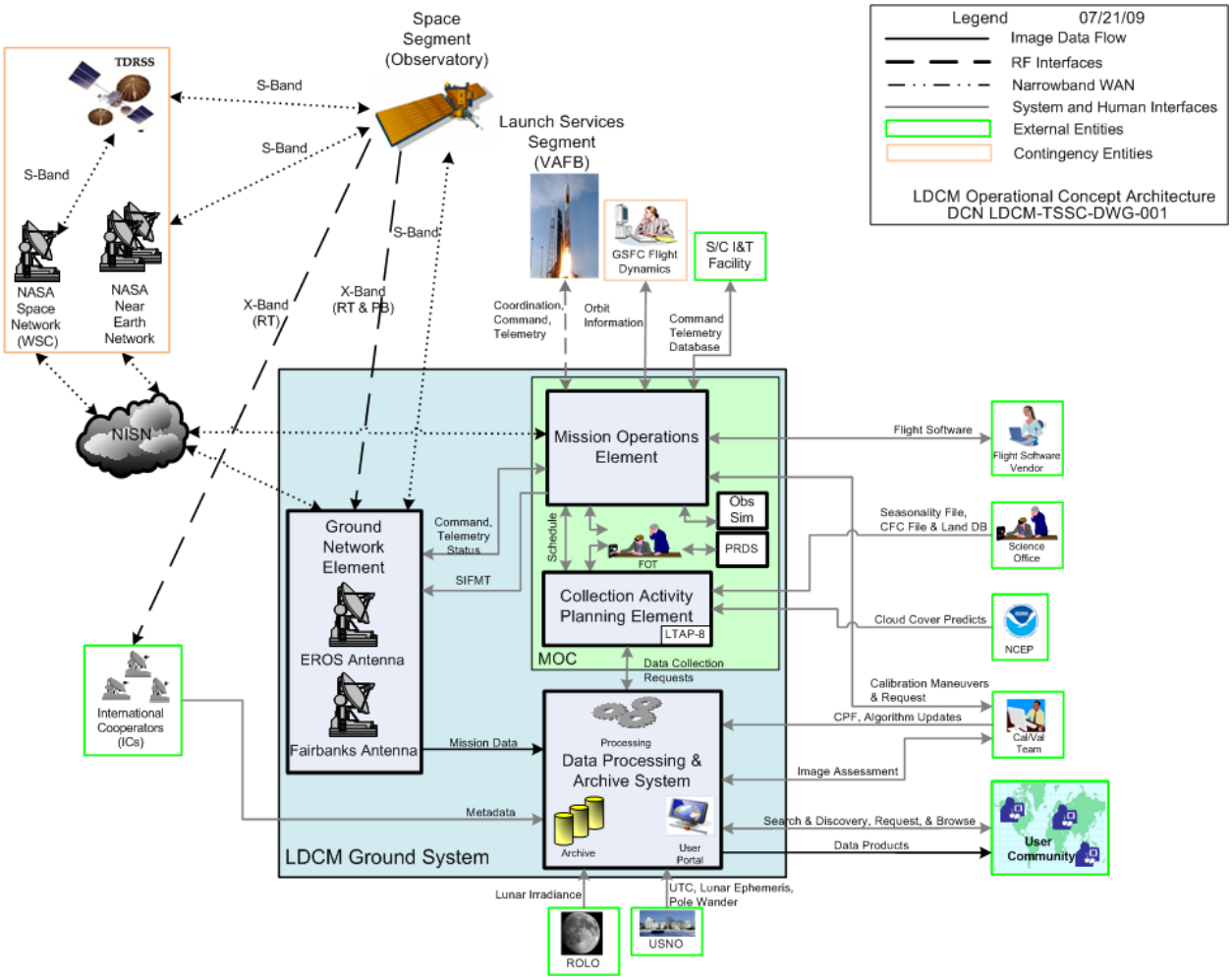

Figure 1 LDCM Operations Concept

The LDCM is a remote sensing mission, which provides data continuity to the Landsat satellite series global multi-spectral data collection and distribution. The LDCM is a satellite and ground based capability that provides:

- Global, moderate-resolution, multi-spectral data collection.
- Long term LDCM data archiving.
- Web-enabled access.
- Continued Landsat International Cooperators (ICs) support.
- Level 0 and Level 1 (L1) data products.

The LDCM Project entails three major mission components: the Space Segment (SS), Ground Segment (GS), and Launch Services Segment (LSS). Because LDCM is a cooperative effort

between NASA and the USGS, each agency has specific responsibilities for delivery of major overall mission capabilities.

Figure 1 illustrates the overall LDCM architecture and the high level interfaces and interactions between the mission components. As shown in the figure, the DPAS is a component of the Ground Segment.

Fundamentally, the responsibility of the DPAS is data processing, storage, long-term archiving, and data and product distribution for the LDCM.

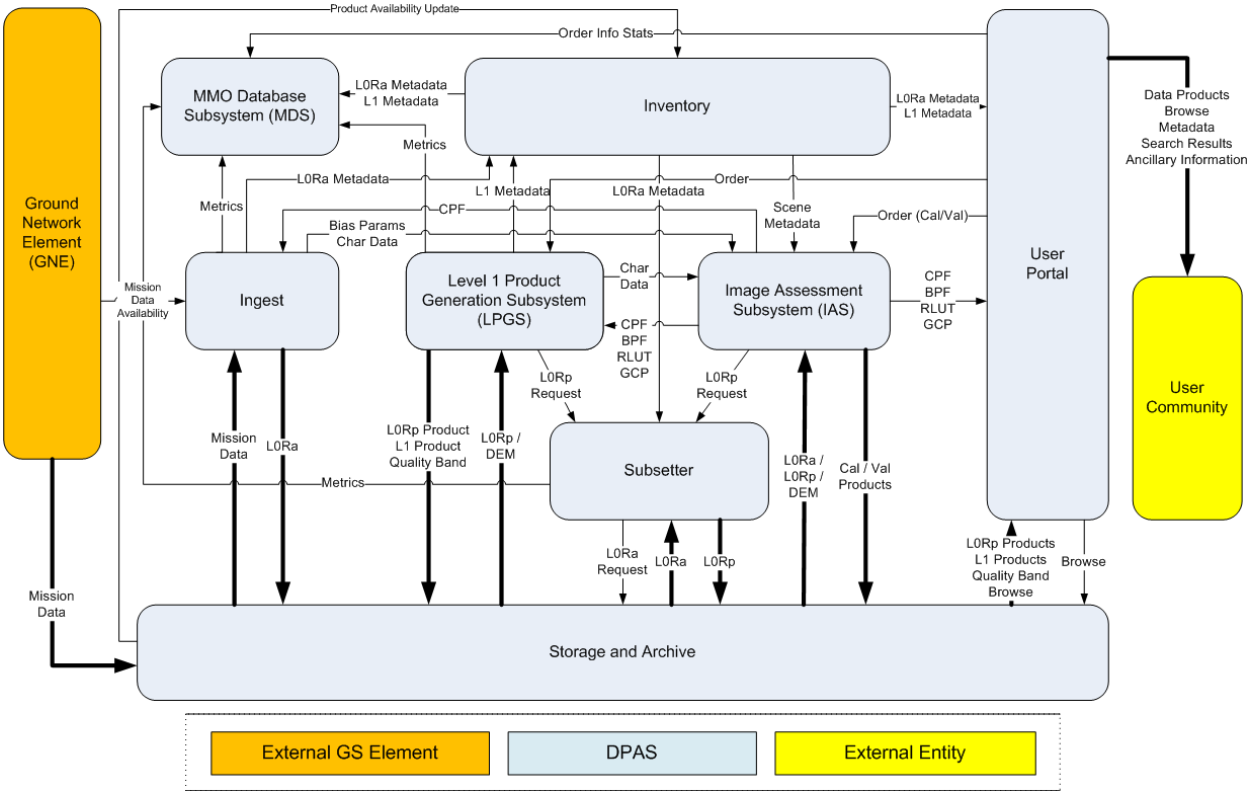

Figure 2 DPAS Block Diagram

Figure 2 illustrates the overall Subsystem architecture and data flow interactions of the DPAS. The following sections provide descriptions of each of DPAS Subsystems.

A complete interface listing for the DPAS is captured in the DPAS N^2 diagram (LDCM-DWG-004). Figure 3 is the context diagram for the DPAS, showing a complete listing of its external interfaces.

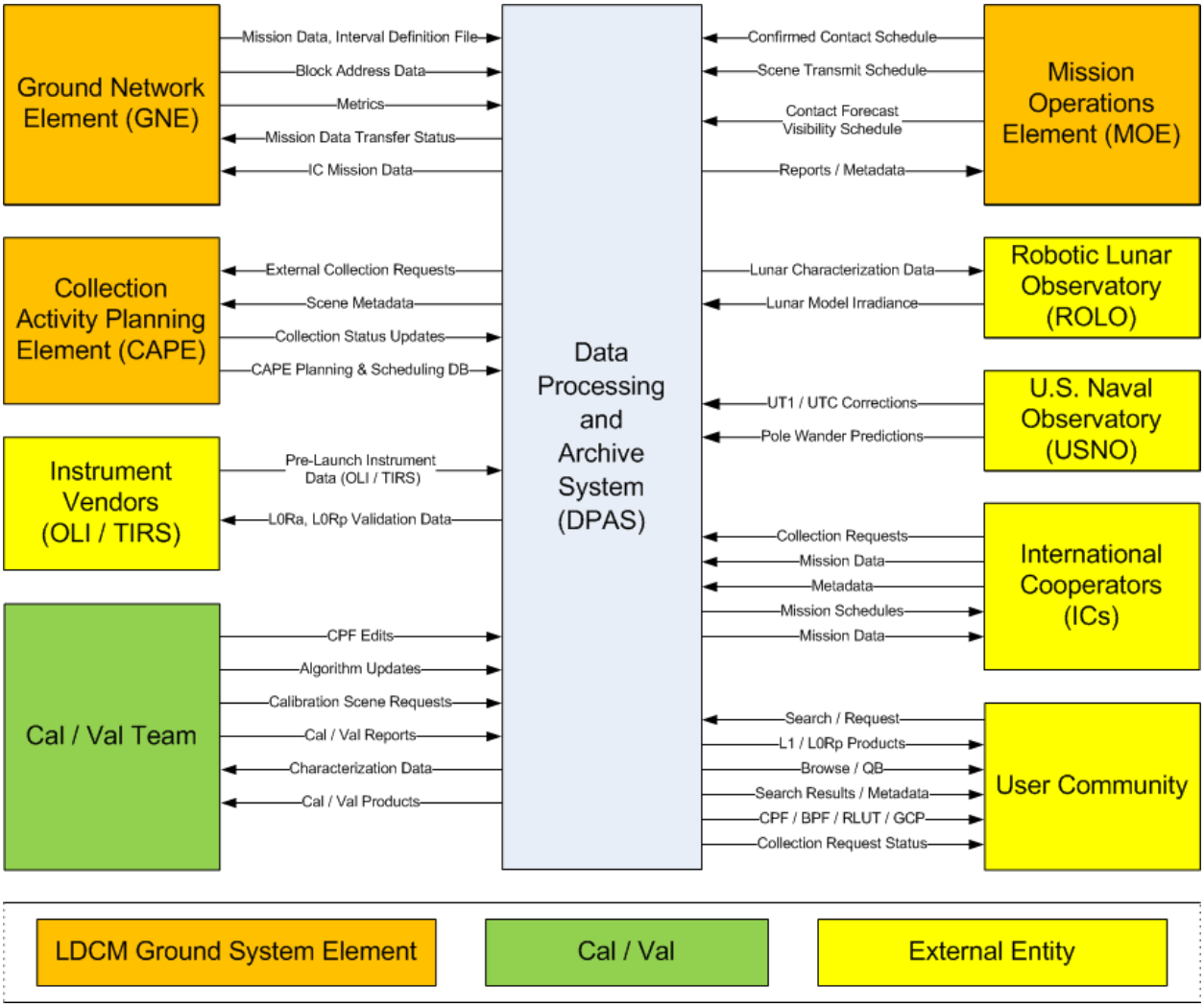

Figure 3 DPAS Context Diagram

3.1 Subsystem Descriptions

The DPAS is composed of eight specific Subsystems, as shown in Figure 2. A description, block, and context diagram for each Subsystem is provided below.

3.1.1 Storage and Archive (SA) Subsystem

SA provides shared storage for product distribution, DPAS use, and provides an archive capability for long-term preservation of the LDCM data.

SA is designed to be highly automated, and require limited operational support. The primary operational users of the SA Subsystem will be the Subsystems of the DPAS. External customers will not access SA directly, but will receive data via the User Portal (UP Subsystem) Subsystem. Engineers will need access to the SA for development, analysis, and test activities. System administrators and operational support staff will require access to the SA for routine administration and monitoring tasks.

The two Subsystems within SA are Storage and Archive.

The Storage Subsystem provides shared disk storage for the LDCM. It includes an "Online Cache" and an "Internal Cache". The Online Cache hosts data that is available to customers via web-enabled access. The types of data that will use the Online Cache include Standard Products (L1T, L0Rp), Full-Resolution Browse (FRB), and 8- and 16-bit Quality Band (QB). The Internal Cache provides storage space for use by the DPAS Subsystems. The Internal Cache will contain L0Ra and DEM data. The Online and Internal Caches will consist of high-capacity shared online storage.

The Archive Subsystem includes the long-term archive of data collected and generated by the LDCM, including Mission, FRB, 8-bit QB, and milestone backups. The Archive Subsystem will include backup copies of data to facilitate recovery from operational data loss. The Archive will include a nearline storage library with an online data cache. This Archive will have robotic media handling, high-density media, offline storage, and hierarchical storage management (HSM) software that manages online, nearline, and offline data.

The Archive Subsystem provides the capability to generate off-line media to be sent to an off-site archive facility for long-term data preservation. The Off-Site Archive will include Mission data, FRB, 8-bit QB, documentation, software, and milestone backups. The primary purpose of the off-site archive is to safeguard the data for Disaster Recovery / Continuity of Operations. This site will adhere to NARA standards to insure the safety of the archived data.

The figure below is the block diagram for the SA Subsystem, showing the components and major data flows.

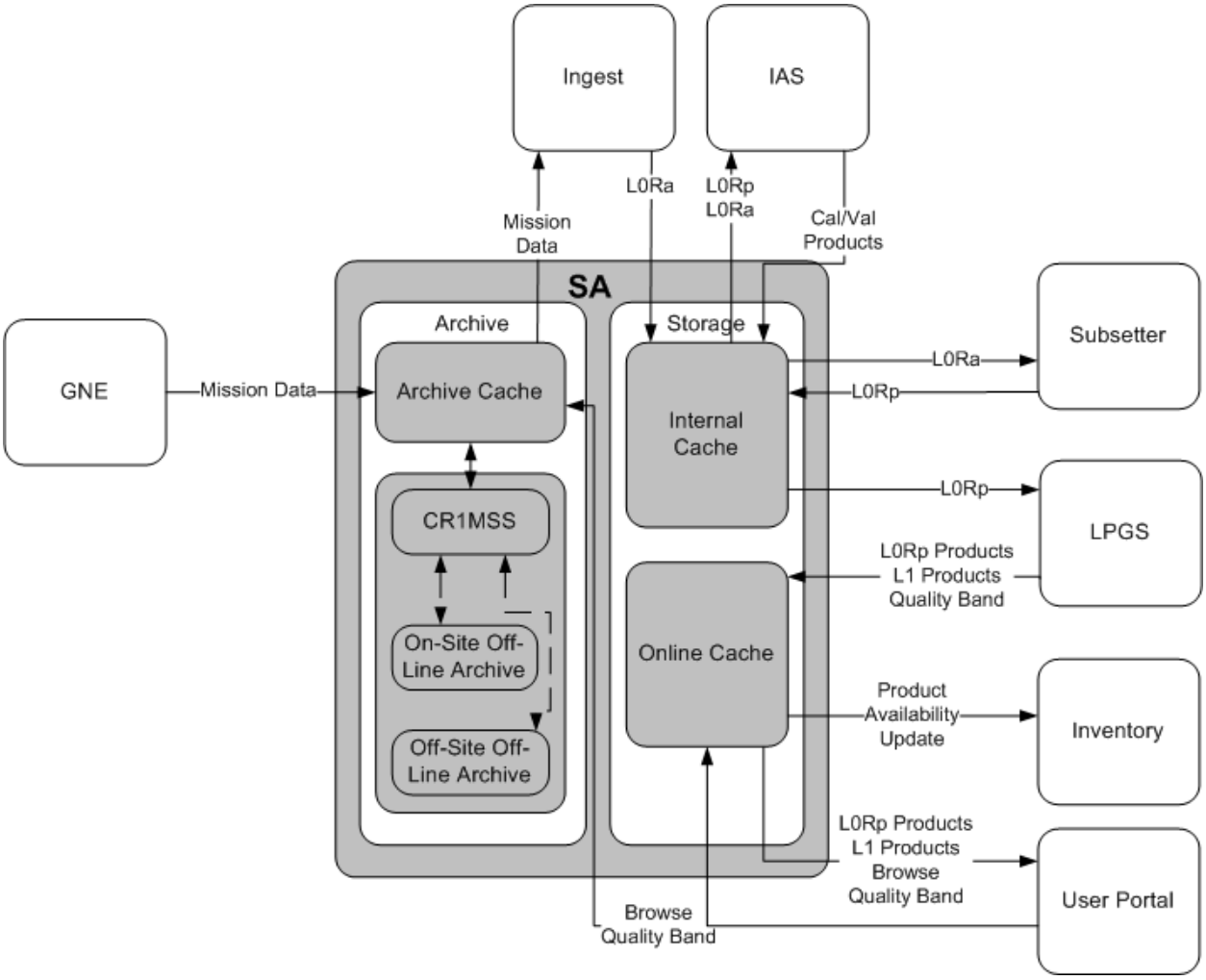

Figure 4 Storage and Archive Subsystem Block Diagram

The figure below is the context diagram for the SA Subsystem, showing a complete listing of its external interfaces.

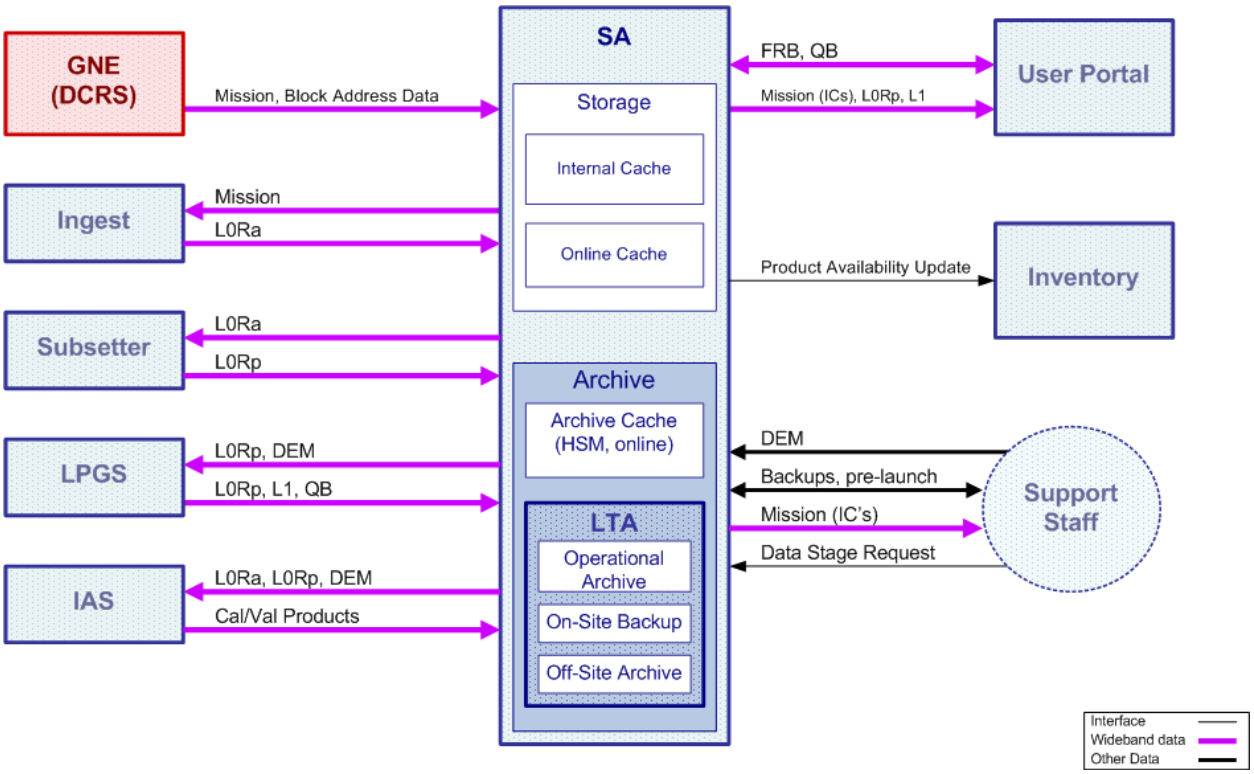

Figure 5 Storage and Archive Subsystem Context Diagram

3.1.2 Ingest Subsystem

The primary work of the Ingest Subsystem is to format Mission Data retrieved by the GNE into Level 0 Reformatted Archive (L0Ra) data. Along with this formatting, the data is analyzed for impulse noise and saturated pixels, dropped lines are filled, duplicate lines are eliminated, ancillary data is corrected, metadata is generated, and processing metrics are collected.

- Inputs:
  - Mission Data intervals
  - Calibration Parameters (CPs) for alignment & scene framing
- Processing:
  - Perform initial quality checks (e.g. CRC, line and frame headers)
  - Ancillary data reconstruction
  - Create interval and scene metadata
  - Format the data for efficient processing
  - Extract and/or calculate sensor, spacecraft, and image statistics
- Outputs:
  - L0Ra intervals
  - Standardized characterization data to IAS
  - Bias Parameters (BPs) for product generation

The figure below is the block diagram for the Ingest Subsystem, showing the components and major data flows.

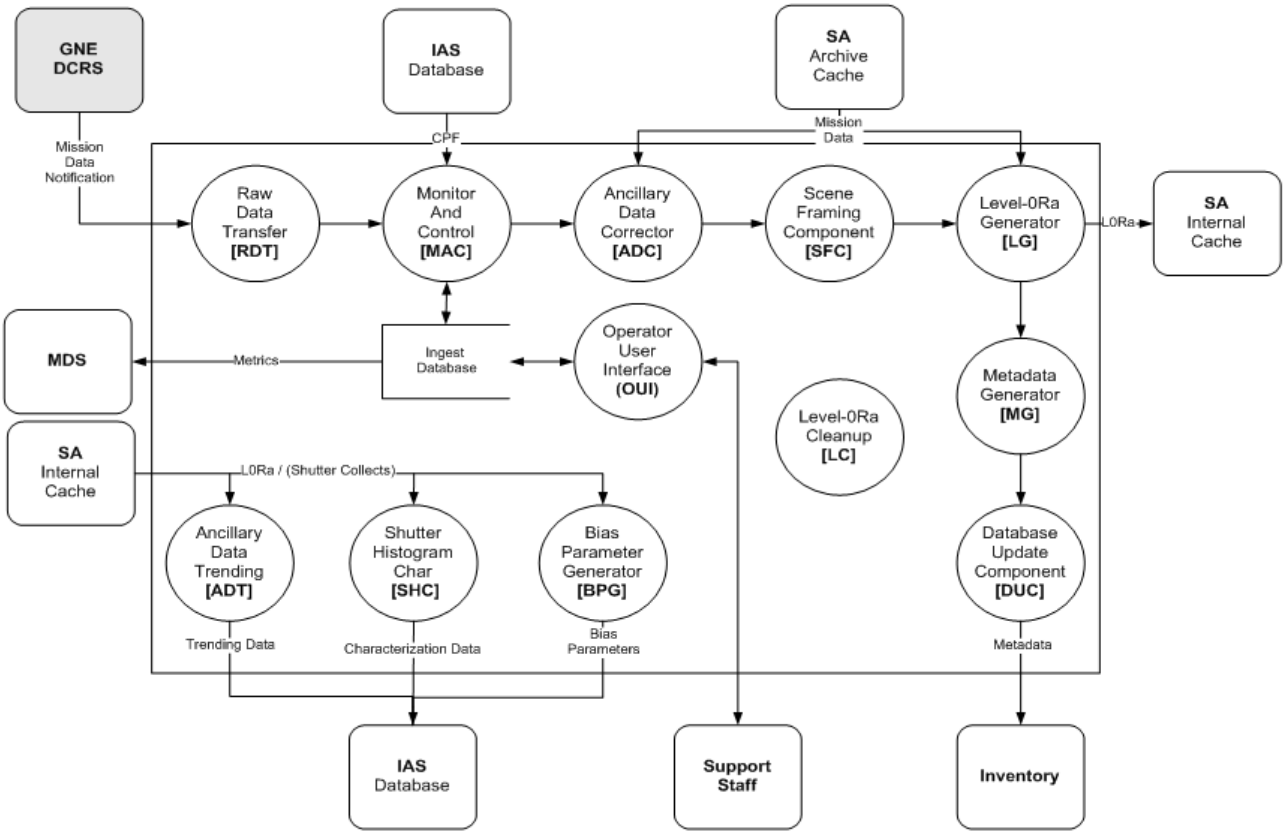

Figure 6 Ingest Subsystem Block Diagram

The figure below is the context diagram for the Ingest Subsystem, showing a complete listing of its external interfaces.

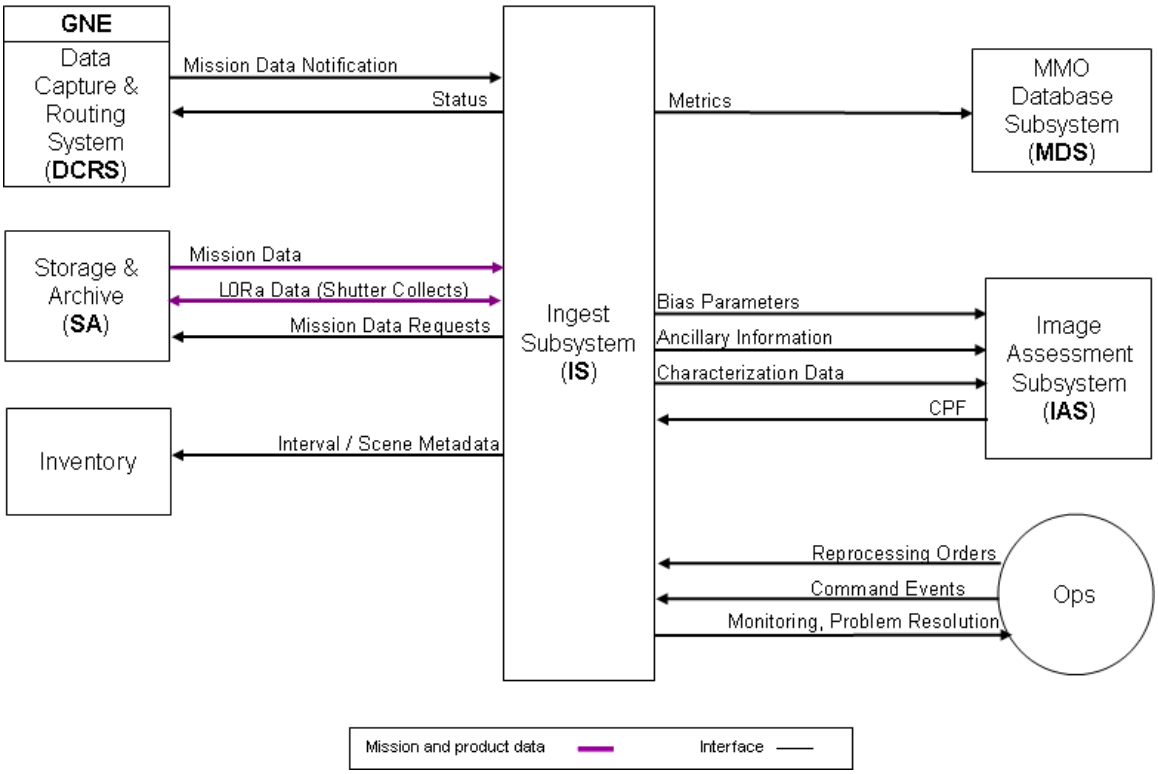

Figure 7 Ingest Subsystem Context Diagram

3.1.3 Mission Management Office (MMO) Database Subsystem (MDS)

At the conclusion of the LDCM project, operational responsibilities for the mission will transition from the LDCM project to the Landsat project. To support operations, the MDS will provide mission status information that the Landsat project requires to manage and properly direct project activities. This information includes the state of the data archives and statistics to track product generation and data distribution. In addition, the Landsat project management and contractor staff will utilize this information to manage the project and to track its status. Fundamental to MDS processing is ETL (Extract, Transform, Load), whereby data from different Subsystem databases is obtained and organized for analysis.

The figure below is the block diagram for the MDS, showing the components and major data flows.

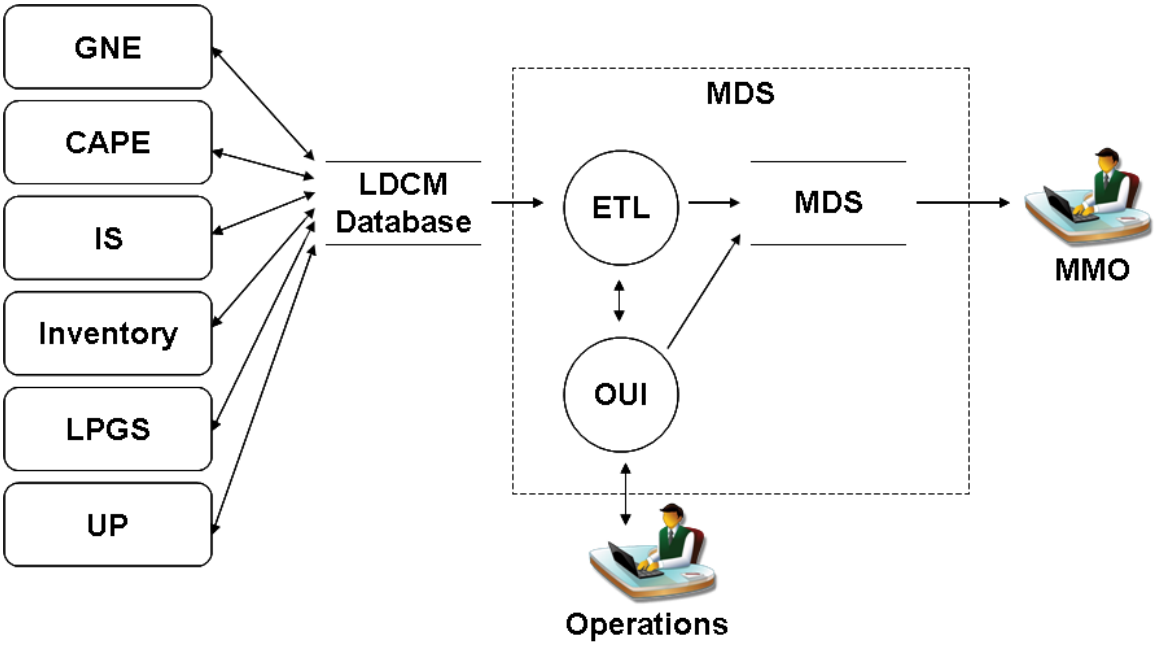

Figure 8 MDS Block Diagram

The figure below is the context diagram for the MDS, showing a complete listing of its external interfaces.

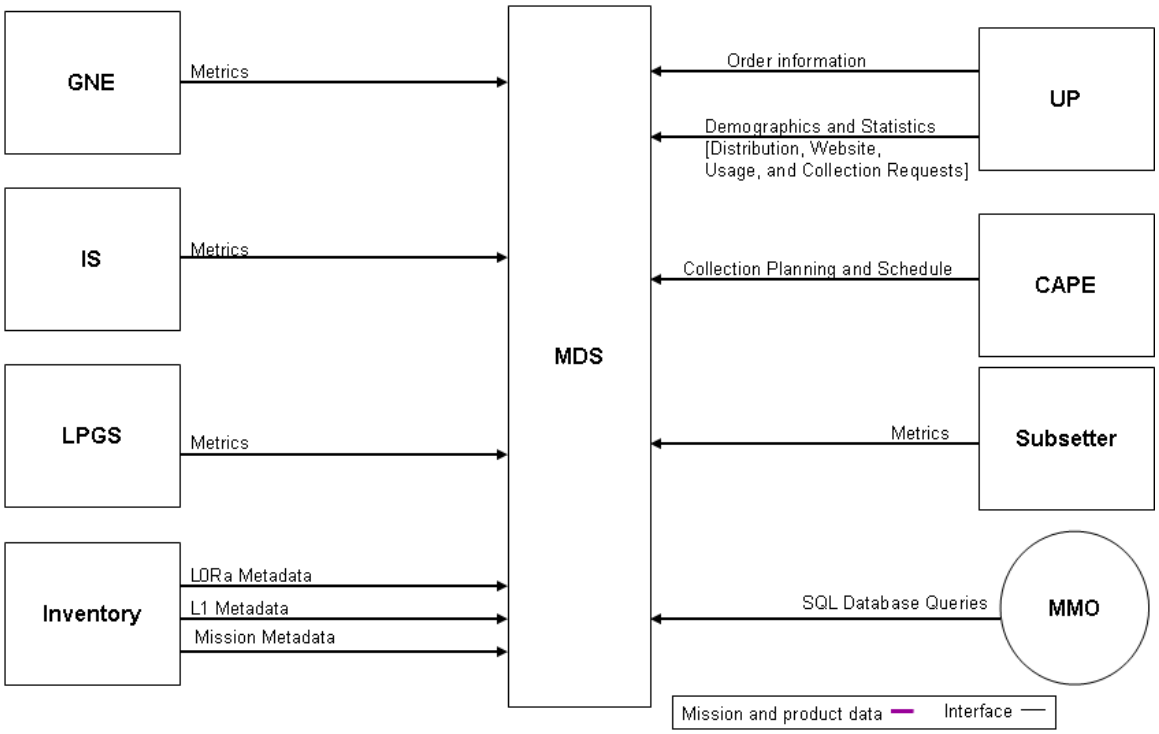

Figure 9 MDS Context Diagram

3.1.4 Image Assessment Subsystem (IAS)

The IAS is a Subsystem which is responsible for the off-line assessment of image quality to ensure compliance with the radiometric and geometric requirements of the spacecraft and the sensors throughout the life of their respective missions. Operational activities occur at Earth Resources Observation and Science (EROS), and less frequent assessments and calibration certification occur at the Landsat Project Science Office, located at the Goddard Space Flight Center (GSFC) in Greenbelt, Maryland.

The IAS characterizes radiometric and geometric artifacts through a series of algorithms. The outputs of the algorithms and their statistics are captured in a relational database for trending, analysis, modeling, and calibration. The IAS processes up to 40 scenes per day for image quality assessment, radiometric and geometric calibrations and characterizations, and artifact correction.

The figure below is the block diagram for the IAS, showing the components and major data flows.

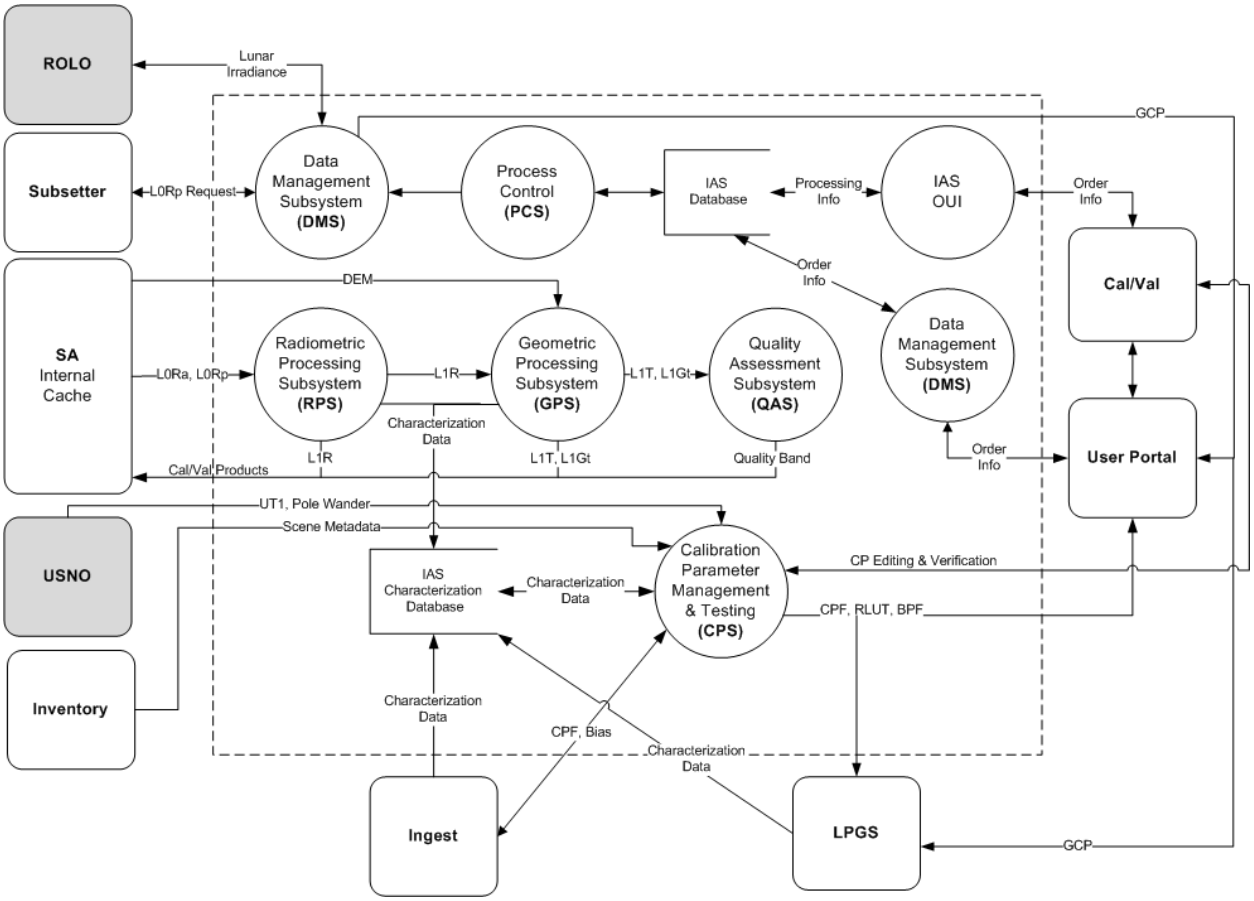

Figure 10 IAS Block Diagram

The figure below is the context diagram for the IAS, showing a complete listing of its external interfaces.

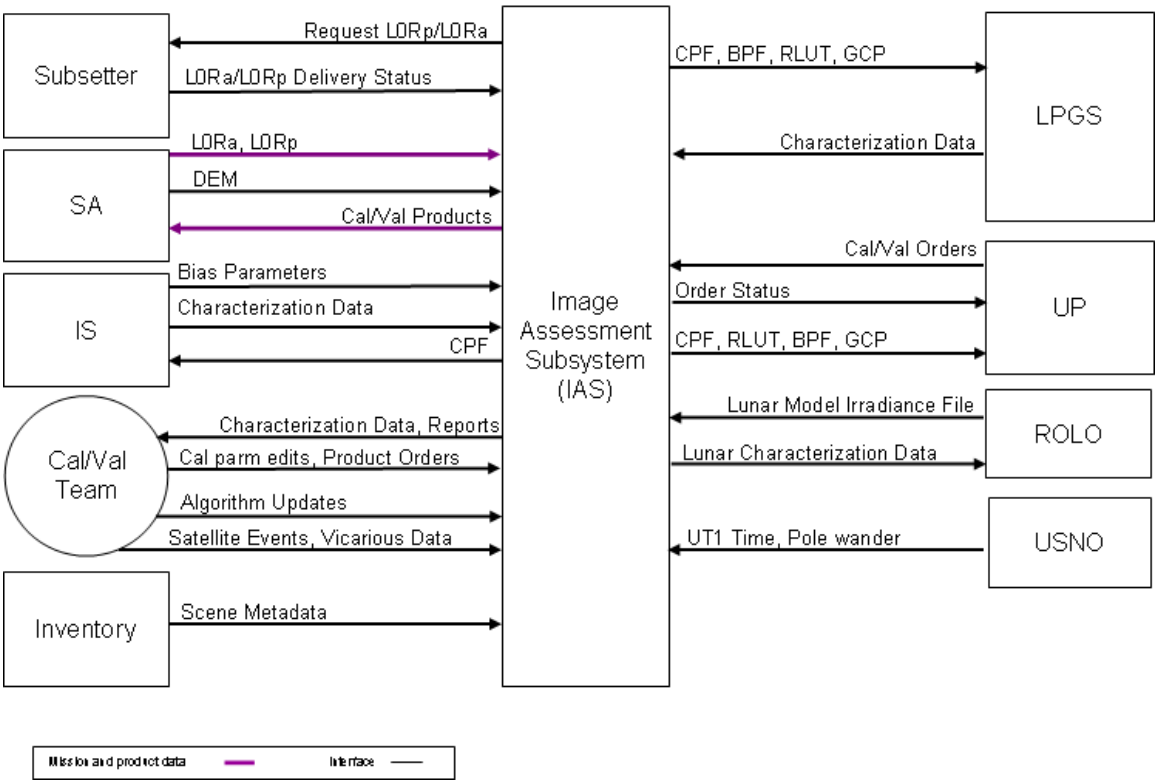

Figure 11 IAS Context Diagram

3.1.5 Level 1 Product Generation Subsystem (LPGS)

The LPGS generates L1 data products. The LPGS uses the same algorithms to generate L1 products that the IAS uses within its L1 processor. This allows the LPGS to provide additional characterization data, captured in the same way, to the IAS for trending and analysis.

The figure below is the block diagram for the LPGS, showing the components and major data flows.

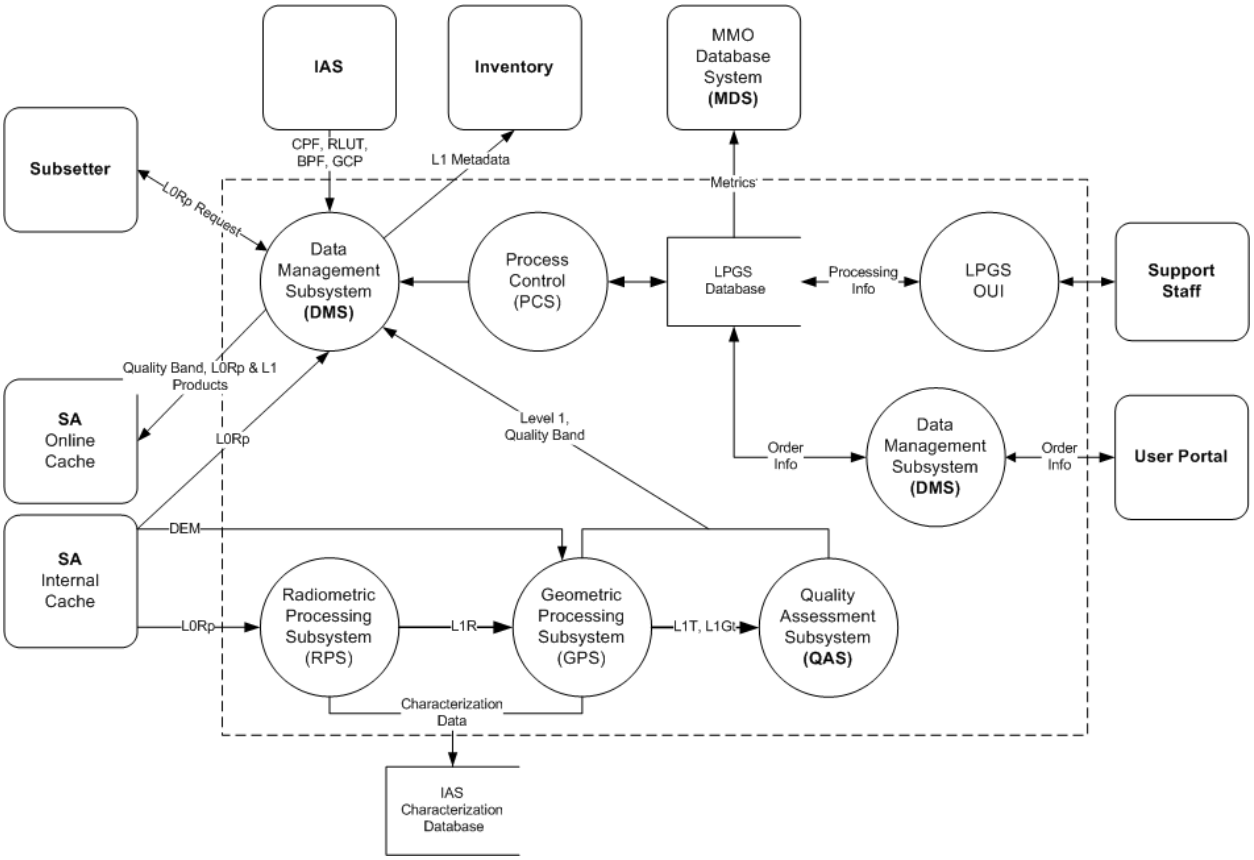

Figure 12 LPGS Block Diagram

The figure below is the context diagram for the LPGS, showing a complete listing of its external interfaces.

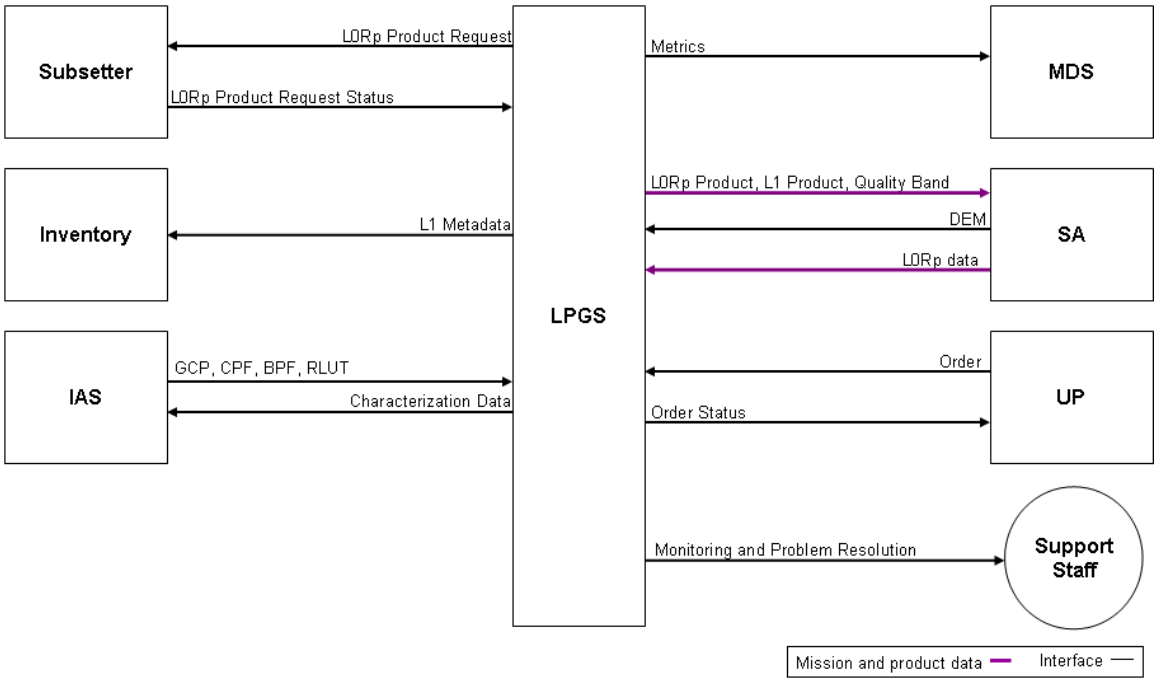

Figure 13 LPGS Context Diagram

3.1.6 User Portal Subsystem (UP Subsystem)

The User Portal Subsystem provides multiple access points to the user community, Cal/Val analysts and support staff. By providing a variety of access mechanisms, both internal and external data consumers have efficient means to discover LDCM data, obtain information, metadata and browse, request and receive products, and submit feedback. To accomplish such operations, the User Portal Subsystem has been functionally decomposed into six components: Project Web Site, Data Access Tool (Earth Explorer), Order (Tracking Reporting and Metrics system), Registration, User Portal Subsystem Services and International Cooperators exchange and validation cache (Exchange Cache)

The Project Web Site and Data Access Tool are internal to the DPAS architecture and provide a mechanism for users to request information and products. Clients external to DPAS can request LDCM metadata, browse and standard products using Open Geospatial Consortium (OGC) and Web services provided by the Services component. Registration and Services components will serve both internal and external requests, while the Order component will only support requests initiated from Earth Explorer. The Exchange Cache component is a temporary storage area for pick up and delivery of IC validation and exchange data.

The figure below is the block diagram for the UP Subsystem, showing the components and major data flows.

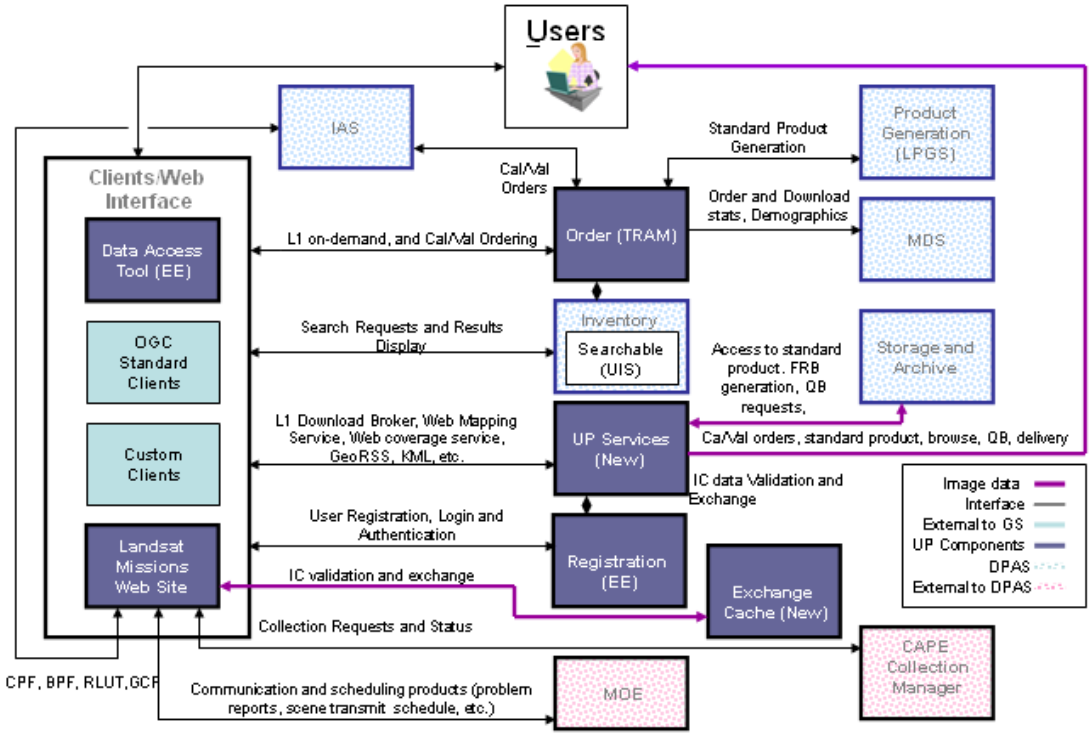

Figure 14 UP Subsystem Block Diagram

The figure below is the context diagram for the UP Subsystem, showing a complete listing of its external interfaces.

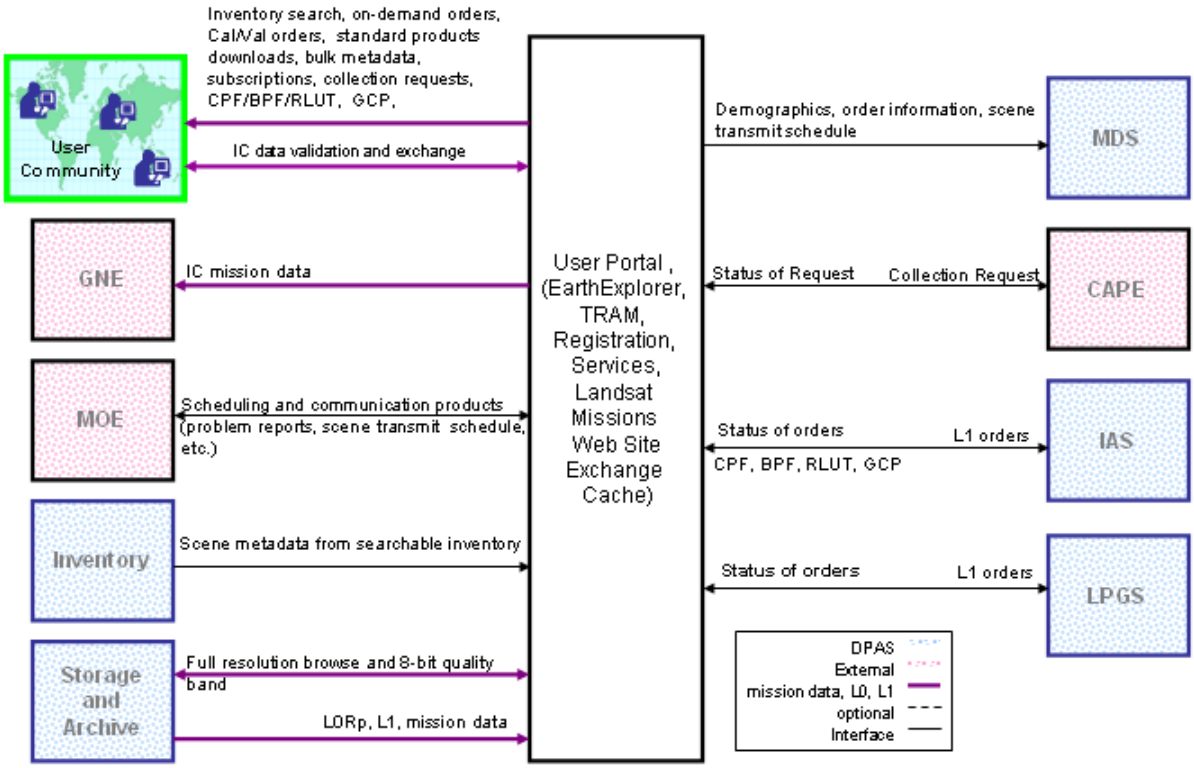

Figure 15 UP Subsystem Context Diagram

3.1.6.1 Earth Explorer (EE)

Earth Explorer (EE) is a web portal into the vast archive of land remote sensing data available from the USGS EROS archive. The archive includes over four million satellite images (1960 to present) and over eight million aerial photographs (1939 to present). EE supports both registered users and the public with access to over thirty data collections. On-line help is available, and customers can search the archive using geographic coordinates, place names, zip codes, or unique parameters exclusive to each collection. EE provides cross-inventory searches of these collections. Most of these collections include on-line browse references. It also provides and supports various services, such as the generic USGS shopping basket and user registration functionality. The EE is an enterprise solution managed by the Long Term Archive (LTA) project.

3.1.6.2 Tracking, Routing, and Metrics (TRAM)

The Tracking, Routing and Metrics (TRAM) enterprise service provides a web service based interface for accepting orders from multiple clients and routing them to the correct producing center. The TRAM provides status on orders, manages demographics information derived from orders and gathers and reports on information passing through the system for management reports. The TRAM is managed by the Long Term Archive (LTA) project.

3.1.7 Subsetter Subsystem

The Subsetter Subsystem extracts L0Rp data from L0Ra data. Requests are received from calling systems via a database entry. The Subsetter Subsystem script monitors the database for new requests and initiates the Subsetter Subsystem for each request. L0Rp data is staged to the Internal Cache and the requestor is notified of processing completion and the location of the product.

The figure below is the block diagram for the Subsetter Subsystem, showing the components and major data flows.

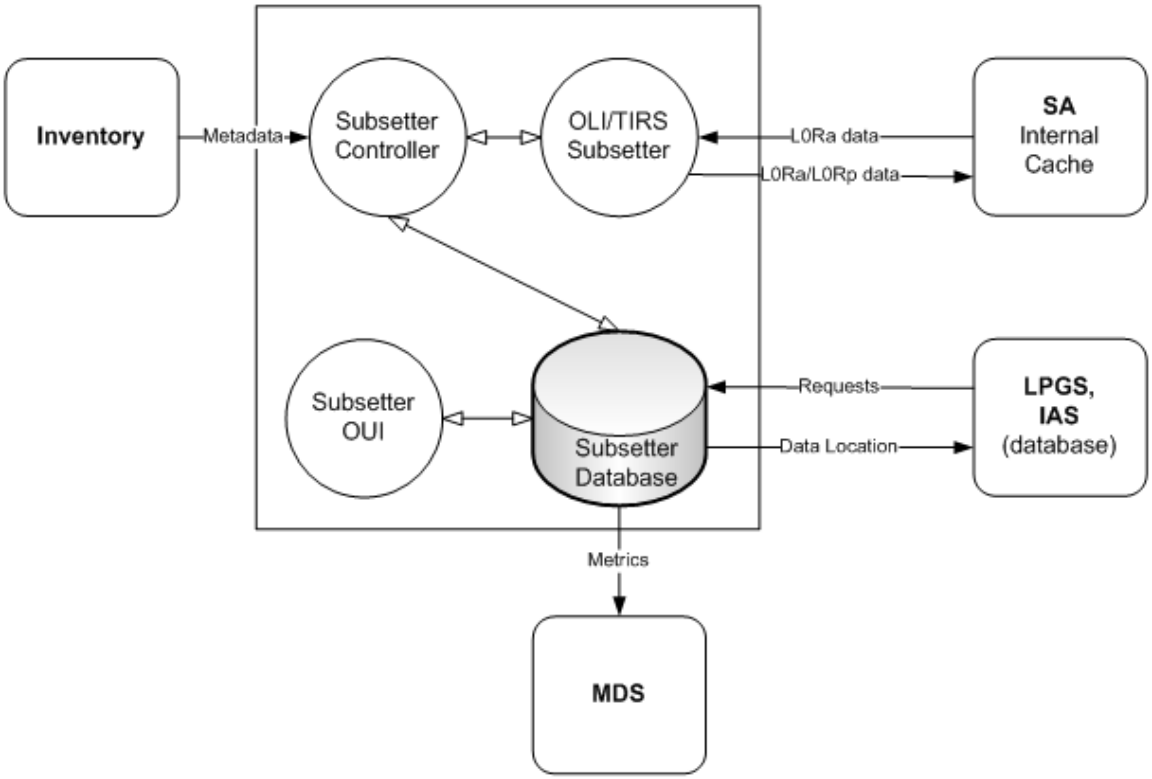

Figure 16 Subsetter Subsystem Block Diagram

The figure below is the context diagram for the Subsetter Subsystem, showing a complete listing of its external interfaces.

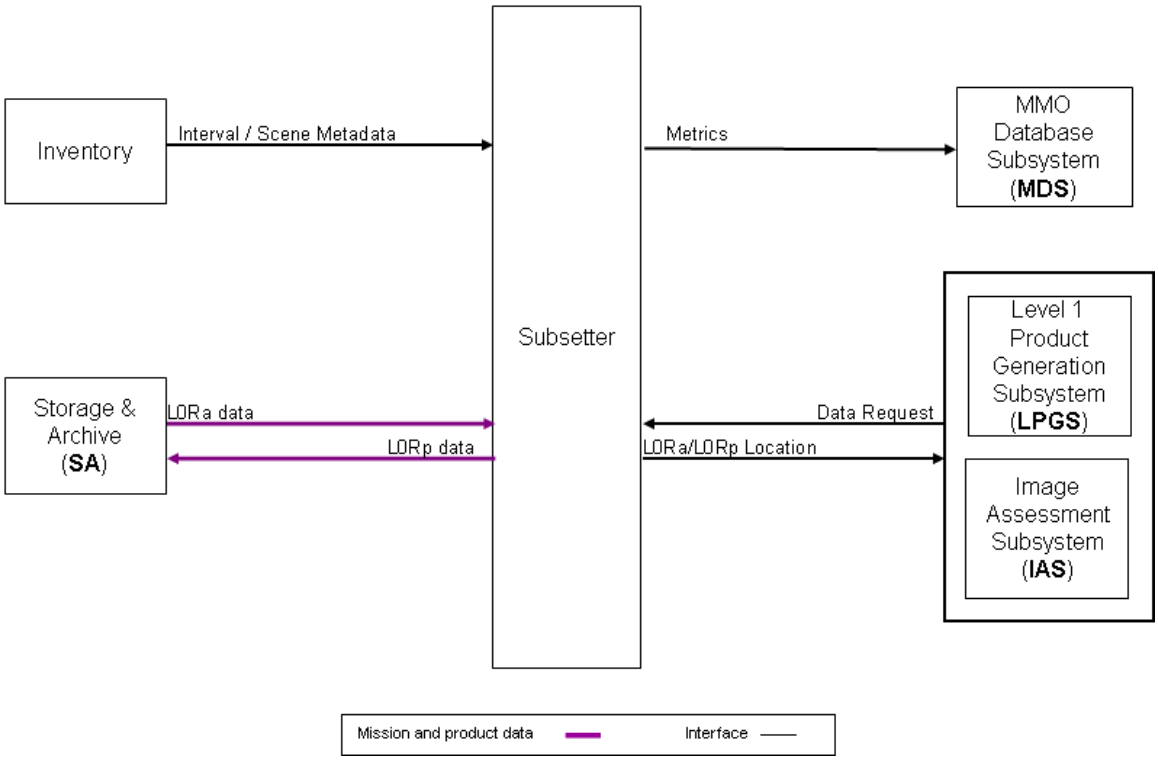

Figure 17 Subsetter Subsystem Context Diagram

3.1.8 Inventory Subsystem

The LDCM Inventory Subsystem performs two key database functions for the DPAS: a master mission database (LDCM Mission Database (LMD)), and a Searchable Inventory Subsystem Database (SID).

The LMD component of the Inventory Subsystem maintains the master copy of mission metadata including Mission Data contents, archive location, quality, version, and flags for Block Address Data (BAD), exchange, and validation data. The LMD is designed to support long term archiving, is isolated for security, and is a protected resource.

The SID component of the Inventory Subsystem contains a subset of the LMD and is highly optimized to support fast product search and ordering. Unlike the LMD, the SID primarily contains records for data for distribution. In addition, the SID contains storage location and work summary information for enterprise systems like the TRAM system to produce products. It also contains location data for 8-bit Quality Band (QB) and Full Resolution Browse (FRB) download. In the DPAS, the primary user of the SID is the Earth Explorer (EE) enterprise component of the User Portal Subsystem (UP Subsystem) Subsystem. The Inventory Subsystem utilizes database procedures (PROC) to copy a subset of the LMD to the SID, with search optimization. Finally, the Data Manager interacts with the Inventory Subsystem via the Data (Manager) User Interface (DUI) component.

The figure below is the block diagram for the Inventory Subsystem.

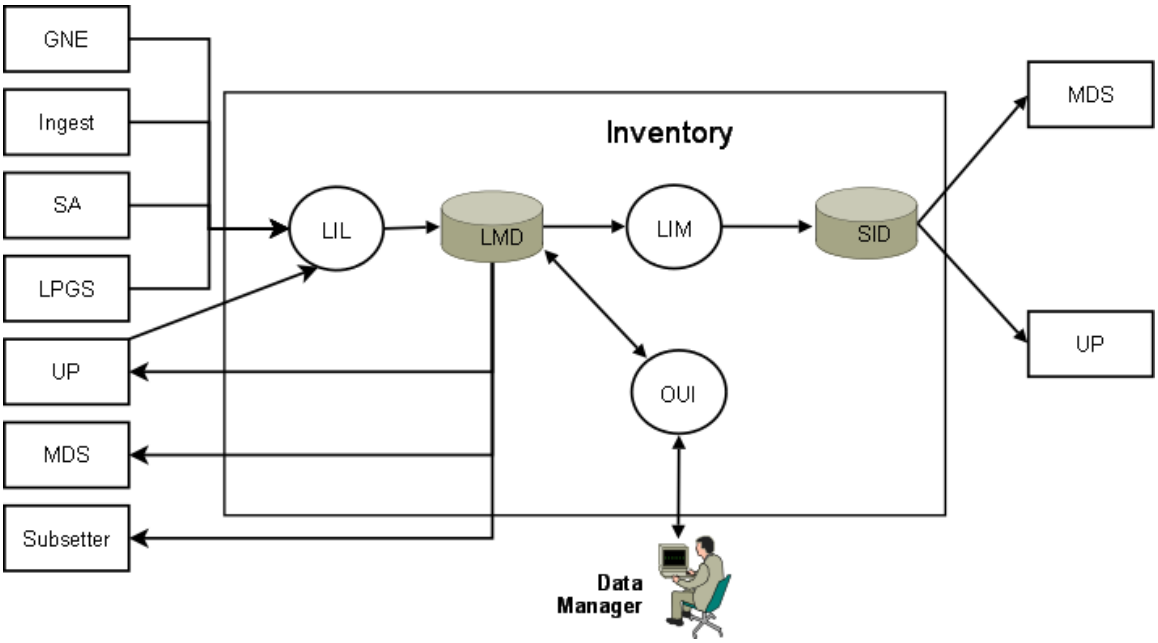

Figure 18 Inventory Subsystem Block Diagram

The figure below is the context diagram for the Inventory Subsystem, showing a complete listing of its external interfaces.

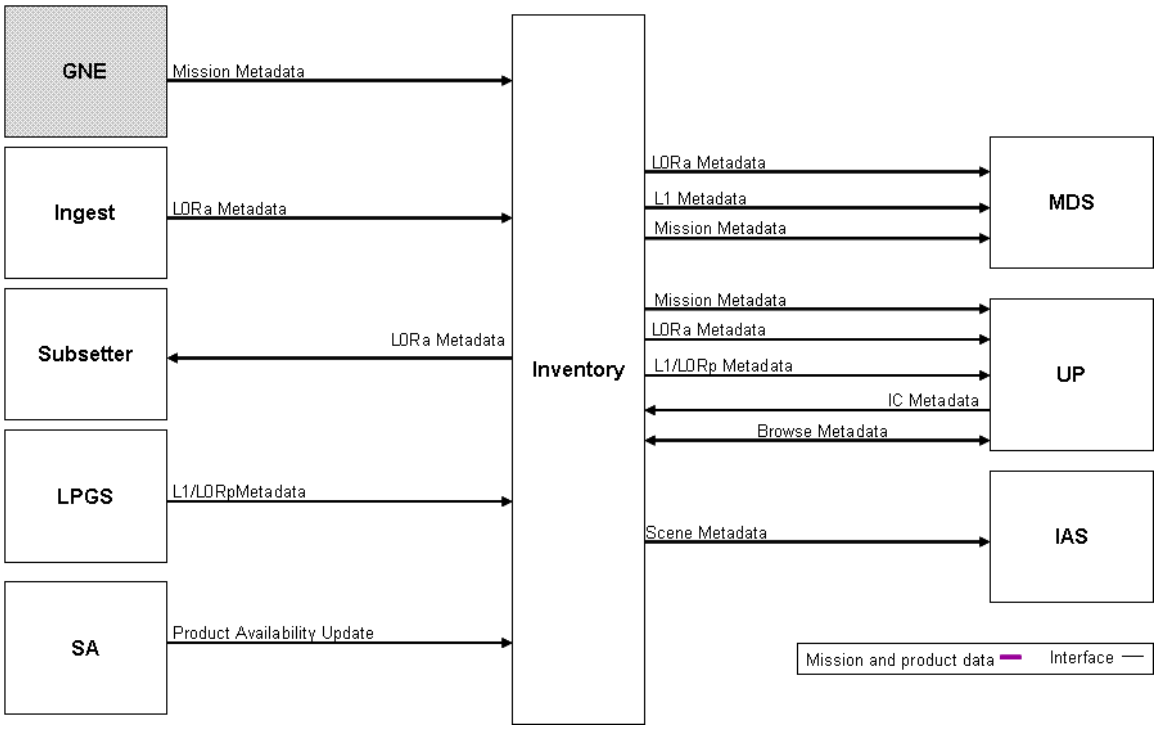

Figure 19 Inventory Subsystem Context Diagram

3.2 Priority Processing

The DPAS supports a priority processing mechanism that enables jobs of varying priority to be processed in a fashion that supports day-to-day concurrent processing, high priority products, and the working off processing backlogs in the event of a system outage. Priority products support both emergency response and Cal/Val requests, while priority ingests support priority collection requests and the working off of forward data processing backlogs. Figure 20 illustrates the priority processing mechanism of the DPAS.

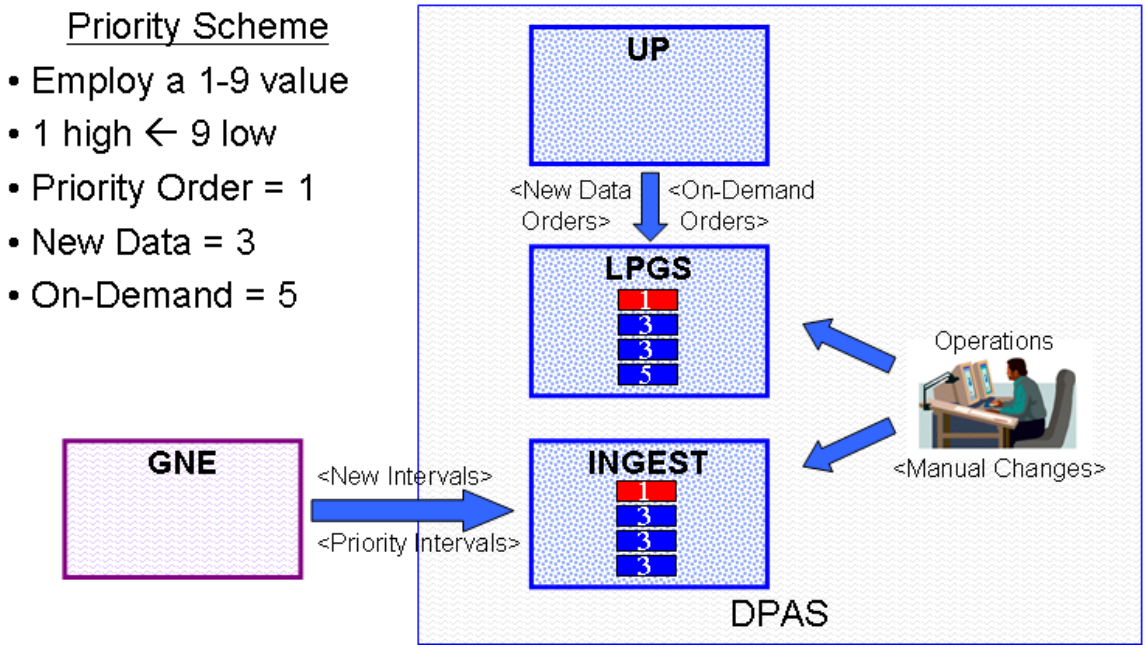

Figure 20 Priority Processing

The figure depicts the processing queues of the Ingest Subsystem and LPGS Subsystems. Each of the Subsystems has requirements to support concurrent processing. In addition, priority processing requirements have been allocated to the GNE (DCRS), UP Subsystem, LPGS, and Ingest Subsystems. The priority scheme of the DPAS assigns each job (ingest job or product request job) a priority value of 1 to 9, with 1 being the highest priority. Priority order jobs are assigned a value of 1, new data jobs (forward processing) a value of 3, and on-demand jobs a value of 5. Jobs of equal priority are processed in oldest to newest order. The use of the 1 to 9 scheme allows for future expansion, should the need arise. At any time prior to actual processing, a DPAS operator may manually change the priority of a job via the Operator User Interface (OUI) of the Ingest Subsystem or LPGS Subsystems. The DCRS and the UP Subsystem assign default priorities to processing jobs based on priority collections or priority product requests. In this manner, both the day-to-day concurrent processing needs as well as

priority processing needs are accommodated. (See 4.1.2 for additional information on concurrent processing activities of the DPAS.)

Section 4 Data Processing and Archive System (DPAS) Operations

4.1 Data Processing, Archive, and Distribution Operations

On a daily basis, the LDCM data processing and archive facility at the USGS Center for EROS will ingest and process at least 400 collected image scenes to a L1 product. Mission data will be archived and a Level 0 Reformatted Product (L0Rp) and L1 product will be made available for download by users. Data processing, archive, and distribution operations will be conducted alongside the current Landsat operations capability as much as possible.

4.1.1 Operations Facility Layout

DPAS operations will exist within an expanded operations area at EROS. This expanded area will contain both the LDCM and Landsat (L5/L7) operations. Figure 20 illustrates the conceptual layout of the operations area.

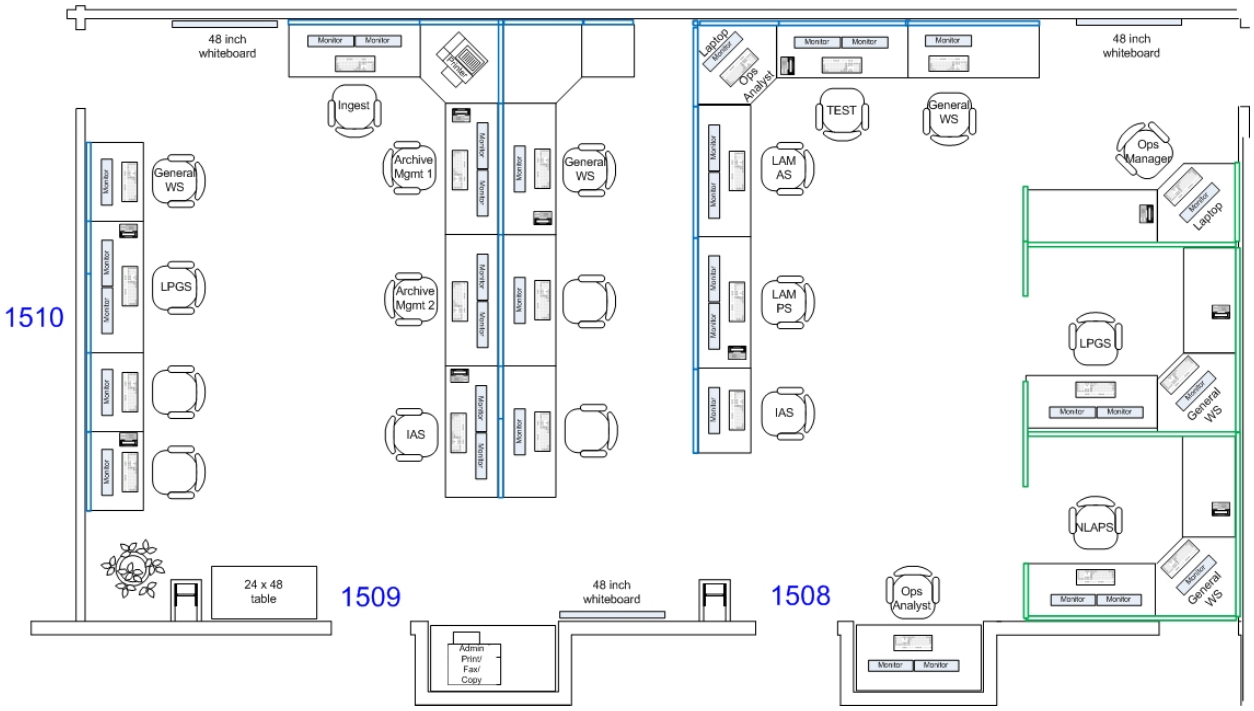

Figure 21 Operations Facility Layout

As shown in the figure, DPAS operations will be conducted in the room 1509 area of EROS. A series of workstations with combinations of single and dual head displays will be used to perform the day-to-day operational activities. Landsat operations will be conducted in the room 1508 area of EROS. Close proximity of the DPAS and Landsat operations teams will ensure good communication and coordination in support of overall Mission Management Office (MMO) activities.

4.1.2 Day In The Life (DITL) Overview

It is anticipated that DPAS operational staff will be employed on a 10x7 shift schedule. Since DPAS operations will be conducted 24x7, system automation is required in the DPAS design. DPAS operations is primarily an oversight and system monitoring activity. Figure 21 presents a Day In The Life (DITL) timeline for DPAS operations, listing the operational activities of the DPAS operations staff, and the DPAS Subsystems.

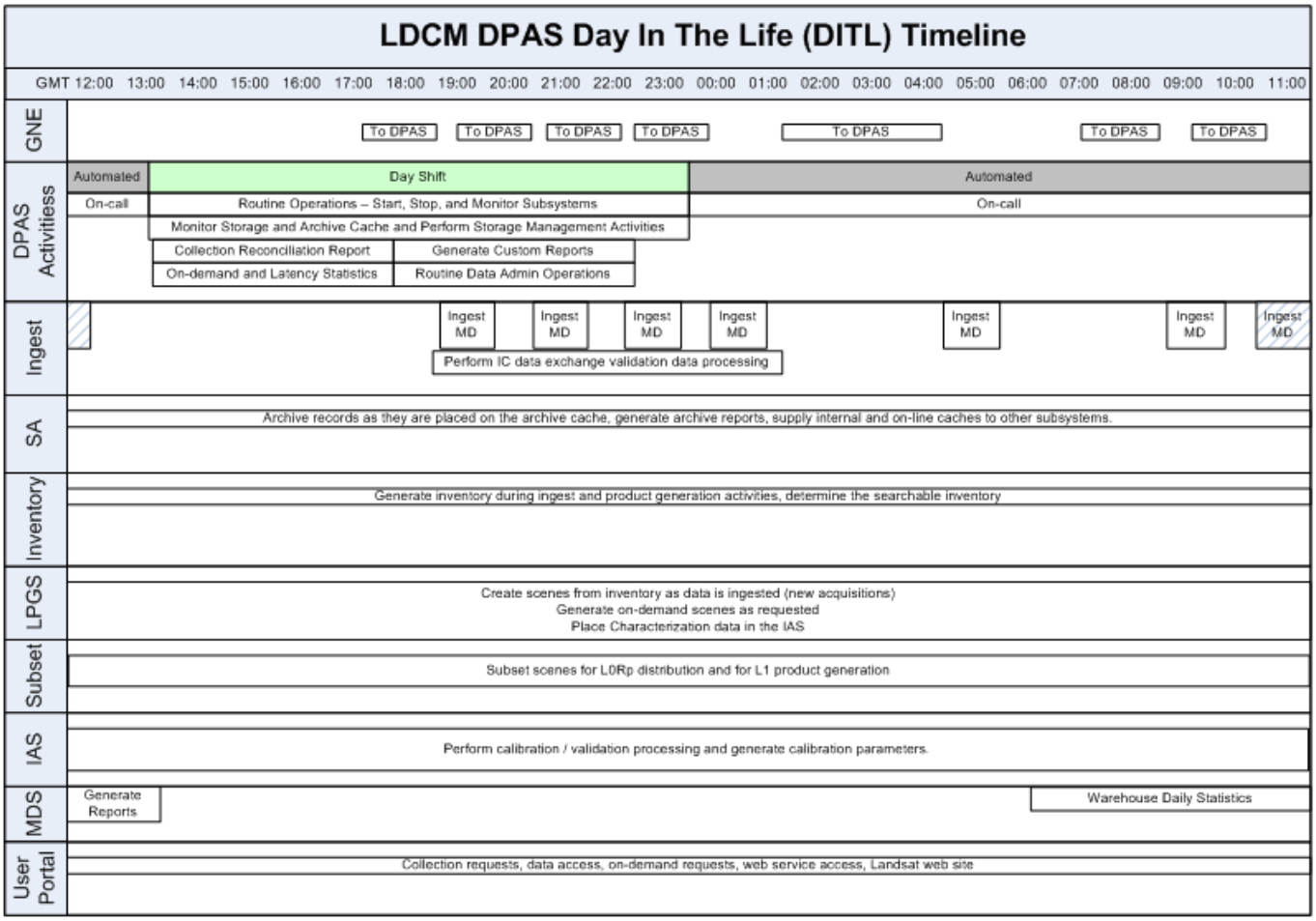

Figure 22 Day In The Life (DITL) Timeline

DPAS operations will start, stop, and monitor the Subsystems, as well as monitor storage cache usage, and operational statistics, to ensure that the required DPAS throughput, latency, and availability requirements are met on a daily basis. In addition, DPAS operations will monitor application GUIs and processing log files for errors for both attended and unattended times. Finally, select operational staff will be on-call during unattended hours in the event of a system failure. In all aspects, DPAS operations will report daily to the MMO.

4.2 Operational Roles

4.2.1 Data Processing and Archive System (DPAS) Operators

The operators monitor all DPAS activities, including the jobs being processed and the status of the systems. The operators are provided with the functionality to start, stop, suspend and monitor processing. If any problems arise with the systems, the operators will notify the appropriate support staff. If any quality issues are identified with the products, a Calibration/Validation (Cal/Val) analyst will be notified.

4.2.2 Data Management Personnel

Data Management personnel are responsible for monitoring the inventory, reconciling metadata and ensuring the inventory reflects archived holdings. Data Managers follow accepted procedures and practices for LDCM Configuration Management (CM).

4.2.3 Software Developers

Software developers perform routine and emergency bug fixes, upgrades, and additional release support. Software developers also build new software to accommodate change requests and software enhancements. Software developers follow accepted procedures and practices for CM.

4.2.4 System Engineers

System engineers are responsible for capacity and upgrade planning, failure detection and correction, and plan test activities. System engineers also plan new hardware and software to accommodate change requests. System engineers also develop procedures and practices for CM and formal system integration and test.

4.2.5 System Administrators

System Administrators perform system and capacity monitoring, failure detection and correction, operating system support, operating system upgrades, backup configurations, and support system security initiatives and testing.

4.2.6 Hardware Engineers

Hardware engineers are responsible for all DPAS hardware, networking, capacity and upgrade planning, failure detection and correction, and equipment setup and deployment. Hardware engineers also coordinate new hardware and software to accommodate change requests. Finally, hardware engineers follow accepted procedures and practices for procurement and system integration.

4.2.7 Database Administrators

Database Administrators perform database capacity and performance monitoring, failure detection and correction, database upgrades, backup configurations, and support database security initiatives and testing.

4.2.8 Calibration/Validation (Cal/Val) Analysts

The Cal/Val analysts' primary function is to ensure the radiometric, geometric, and spatial quality of remotely sensed imagery. The Cal/Val analyst uses the IAS tools to evaluate these qualities, and also to test any calibration parameter updates before they are baselined. Once

algorithms and code are tested and ready for production use, they will be assigned to a software release. The algorithms and code will be copied to a test environment that mimics the production environment and retested before being formally released.

4.2.9 Data Quality Analyst (DQA)

The Data Quality Analyst (DQA) is a point of contact internal to the DPAS who interacts with ICs for DV&E operations. The DQA performs the validation process and communicates results with the ICs. In addition, the DQA facilitates the exchange of Mission Data with ICs.

4.2.10 International Cooperators (ICs)

ICs receive direct data downlinks from the observatory, and may submit data collection requests through the UP Subsystem. ICs routinely provide metadata to the DPAS, and participate in periodic data validation activities. They also exchange Mission Data with the USGS, upon request by either party.

4.2.11 Mission Management Office (MMO)

The MMO is the USGS entity responsible for the day-to-day operations of the DPAS. The MMO interfaces with the Flight Operations Team (FOT) as part of the overall Landsat operations. The MMO is responsible for overall data management, DPAS operations, and data collection reconciliation. Finally, the MMO is the primary user of the MDS, which collects collection and other pertinent metrics from the DPAS for standard and ad-hoc reporting in support of mission management.

Section 5 Scenarios

5.1 Scenario Conventions

The figure below illustrates conventions that are used in the scenario diagrams of this section. Various line colors, styles, and weights are used to distinguish the data and communication flows between the DPAS Subsystems and external entities, as shown in the scenario key. Arrow directions indicate data flow, and enterprise components are designated by grey boxes and the use of callouts. Finally, sequence blocks are used to indicate the order of events within a scenario.

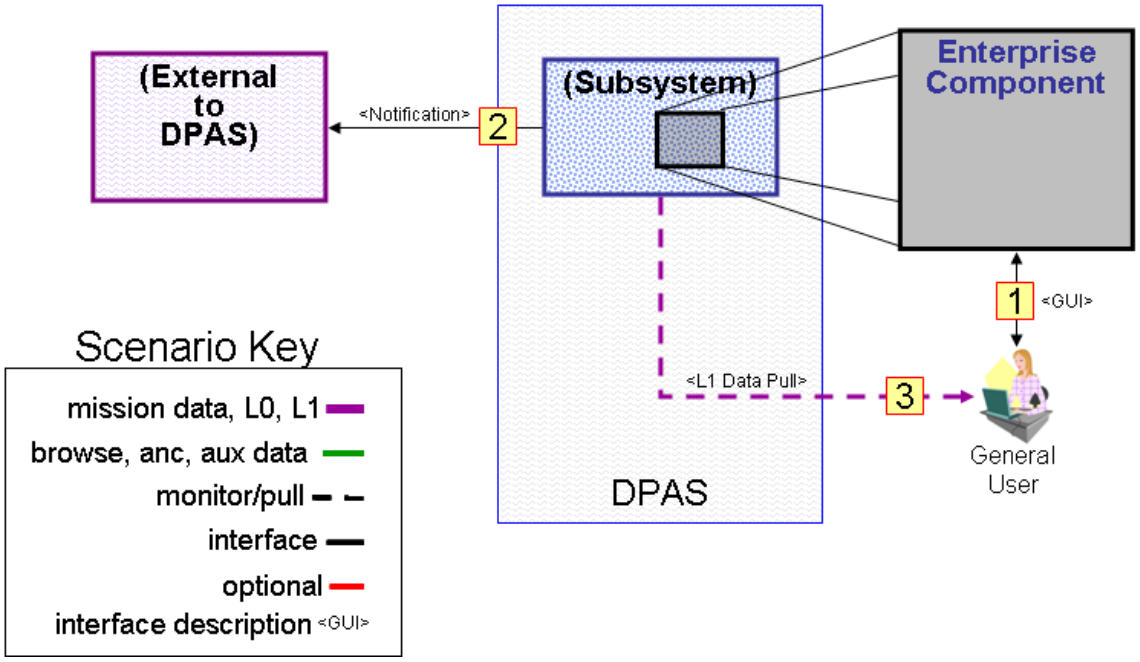

Figure 23 DPAS Scenario Conventions

5.2 Standard Processing

As stated in Section 2 of this document, the fundamental responsibility of the DPAS is data processing, storage, long-term archiving, and data and product distribution for the LDCM. Central to this responsibility is the concept of standard processing. Standard processing consists of three key activities: *Ingest Subsystem Mission Data*, *Standard Product Generation*, and *Browse Generation*. The figure below depicts the high level flows that form these three activities. Each of these activities is shown in detail in the subsequent sections.

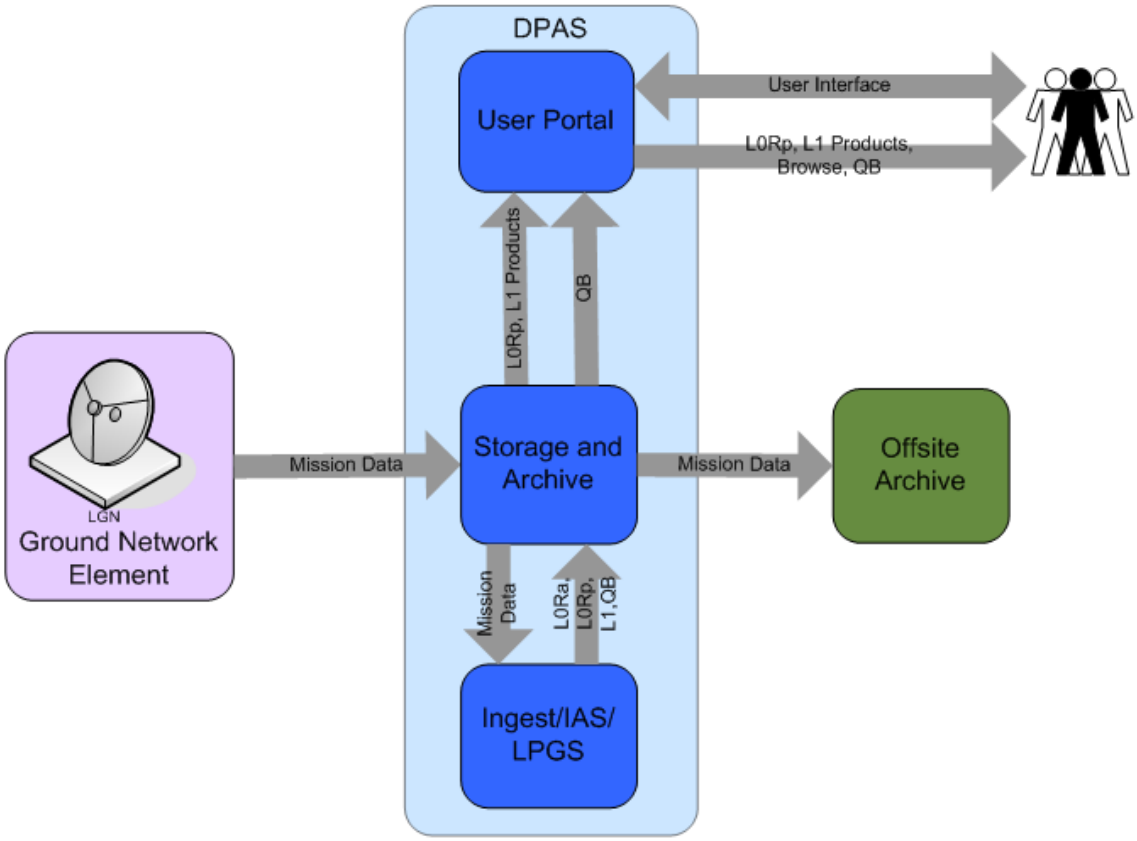

Figure 24 Standard Processing Data Flows

5.2.1 Ingest Subsystem Mission Data

A fundamental responsibility of the DPAS is to format collected Mission Data into L0Ra data. Along with this formatting, the data is analyzed for impulse noise and saturated pixels, dropped lines are filled, duplicate lines are eliminated, ancillary data is corrected, metadata is generated, and processing metrics are collected, as shown below.

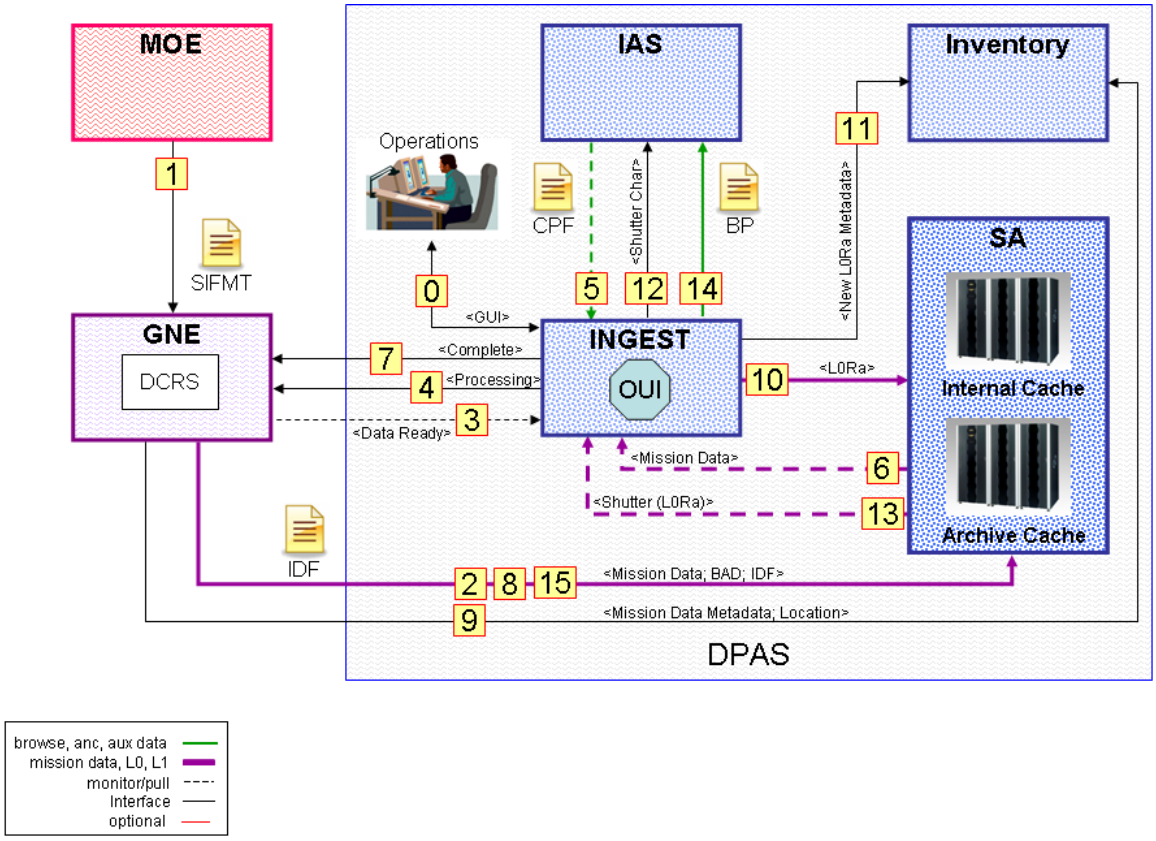

Figure 25 Ingest Subsystem Mission Data

Step	Description
0	At any time, Operations may monitor Ingest Subsystem processing utilizing the Operator User Interface (OUI). When processing anomalies are detected, Operations consults their procedures to resolve them (see *5.10.1 Ingest Subsystem Error Recovery*).
1	The MOE provides the DCRS with the Scene to Interval Mapping Table (SIFMT).
2	When a group of files related to an interval (sensor on to sensor off) are received, as defined in the SIFMT, DCRS groups the files into a Mission Data interval directory, creates an Interval Definition File (IDF), and places the data and the IDF in a temporary work area on the Archive Cache. The DCRS waits until all files related to an interval are received before placing the interval in the temporary work area.
3	The DCRS updates a notification field in the DCRS processing database indicating that an interval of Mission Data is ready for processing. The Ingest Subsystem monitors the

	notification field in the DCRS database to know when processing of an interval can start.
4	The Ingest Subsystem updates the status field in the DCRS processing database indicating the Mission Data is being processed.
5	The Ingest Subsystem retrieves the appropriate Calibration Parameter File (CPF) from the IAS for processing the Mission Data.
6	The Ingest Subsystem reads the Mission Data and IDF from the temporary work area of the Archive Cache.
7	After successful processing of the Mission Data, the status field in the DCRS processing database is updated by the Ingest Subsystem to indicate that the Mission Data is ready for archival.
8	The DCRS moves the Mission Data from the temporary work area to the permanent area of the Archive Cache.
9	The DCRS updates the Inventory Subsystem with the Mission Data metadata and file location information.
10	The Ingest Subsystem writes the L0Ra data to the Internal Cache.
11	The Ingest Subsystem writes the interval and scene metadata and location of the L0Ra data to the Inventory Subsystem. Off-nadir collects are flagged as part of the L0Ra metadata.
12	**SHUTTER DATA ONLY:** The Ingest Subsystem characterizes the shutter data and places that characterization data in the IAS characterization database.
13	**SHUTTER DATA ONLY:** The Ingest Subsystem retrieves previous shutter collects (L0Ra) from the Archive Cache.
14	**SHUTTER DATA ONLY:** The Ingest Subsystem calculates BPs from the new and previous shutter collects and places them in the IAS database. (When BPs are extracted from the IAS database for use by LPGS or ICs, a Bias Parameter File (BPF) is created.)
15	**FOR BAD ONLY:** The DCRS copies the Mission data (Block Address Data) to the permanent directory of the Archive Cache.

5.2.2 Standard Product Generation

Another driving requirement for the DPAS is the generation of standard products for distribution to the user community, as shown below. These standard products consist of L0Rp and L1 products as defined in their respective Data Format Control Book (DFCB). At a minimum, the DPAS must produce 400 L0Rp and L1 products per day.

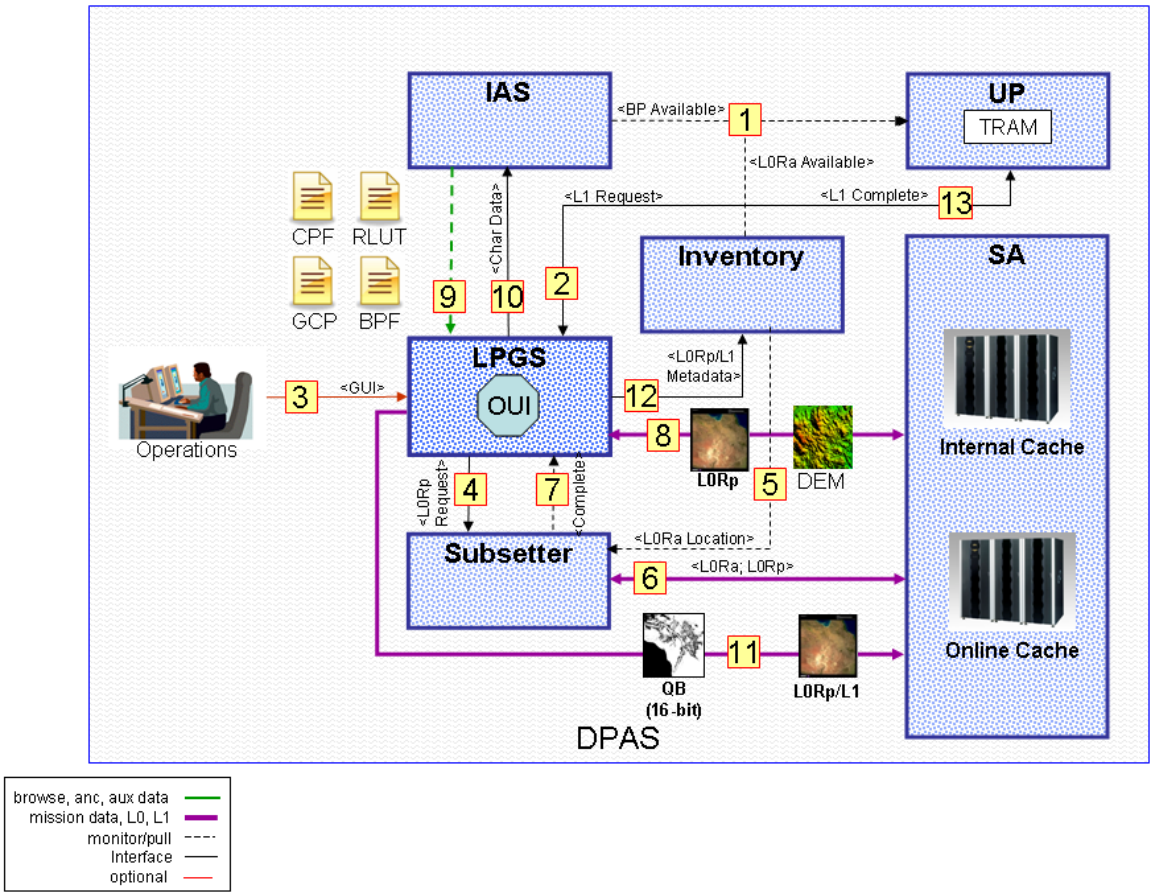

Figure 26 Standard Product Generation

Step	Description
1	The UP Subsystem monitors the Inventory Subsystem for new scene availability, and monitors the IAS database for the availability of BPs. UP Subsystem also monitors the BP wait time. When BPs become available for new scenes in the Inventory Subsystem, or when the maximum BP wait time has been exceeded, UP Subsystem will submit L1 product orders for the new scenes (Step #2).
2	The UP Subsystem submits a L1 product request (via the TRAM) for each new scene in the Inventory Subsystem with matching BPs or that have exceeded the timeout period.
3	**OPTIONAL:** At any time, Operations may manually reprioritize product generation requests in the LPGS processing queue through the LPGS Operator User Interface (OUI). This capability allows Operations to control the production queue and

	accommodate priority processing requests.
4	The LPGS invokes the Subsetter Subsystem to extract a scene (L0Rp) from the specified L0Ra.
5	The Subsetter Subsystem pulls scene extent information and L0Ra file location from the Inventory Subsystem.
6	The Subsetter Subsystem reads the L0Ra data from the Internal Cache and writes the L0Rp data to the Internal Cache.
7	The LPGS monitors the Subsetter Subsystem database to determine subset completion and L0Rp data location.
8	The LPGS calculates the DEM required for the L1 product and reads the DEM and L0Rp data from the Internal Cache. The LPGS writes intermediate processing files to the Internal Cache.
9	The LPGS pulls the required CPF, BPF, RLUT, and GCP data from the IAS for the L1 product.
10	During processing of the standard product, select characterization data is collected and provided to the IAS. Off-nadir characterization data is flagged for identification.
11	As part of the standard product processing, the LPGS creates a 16-bit Quality Band (QB) for the L1 product. A terrain occlusion mask is generated and included in the QB to indicate where imagery is occluded due to terrain effects. The 16-bit QB is written to the Online Cache for distribution with the L1 product (as compared to the 8-bit QB that is distributed with the FRB; see *5.2.3 Browse Generation*). In addition, the LPGS places the L1 and L0Rp products on the Online Cache for distribution, and deletes intermediate processing files from the Internal Cache.
12	The LPGS updates the Inventory Subsystem with L0Rp and L1 product metadata. Off-nadir products are flagged as part of the L0Rp and L1 metadata.
13	The LPGS notifies the UP Subsystem (TRAM) that the standard product processing was completed.

5.2.3 Browse Generation

The DPAS produces two types of browse images, Full Resolution Browse (FRB) and Reduced Resolution Browse (RRB), both derived from the L1 product. FRB images are stored and archived; RRB are provided to Earth Explorer (EE). Both types of browse are made available to a user, to assist with quick assessment of image coverage and quality. In addition, an 8-bit Quality Band (QB) is created from the 16-bit QB created for the L1 product, and is made available with the FRB. Finally, the EE, as shown below, is illustrated as part of the UP Subsystem but is technically an enterprise solution.

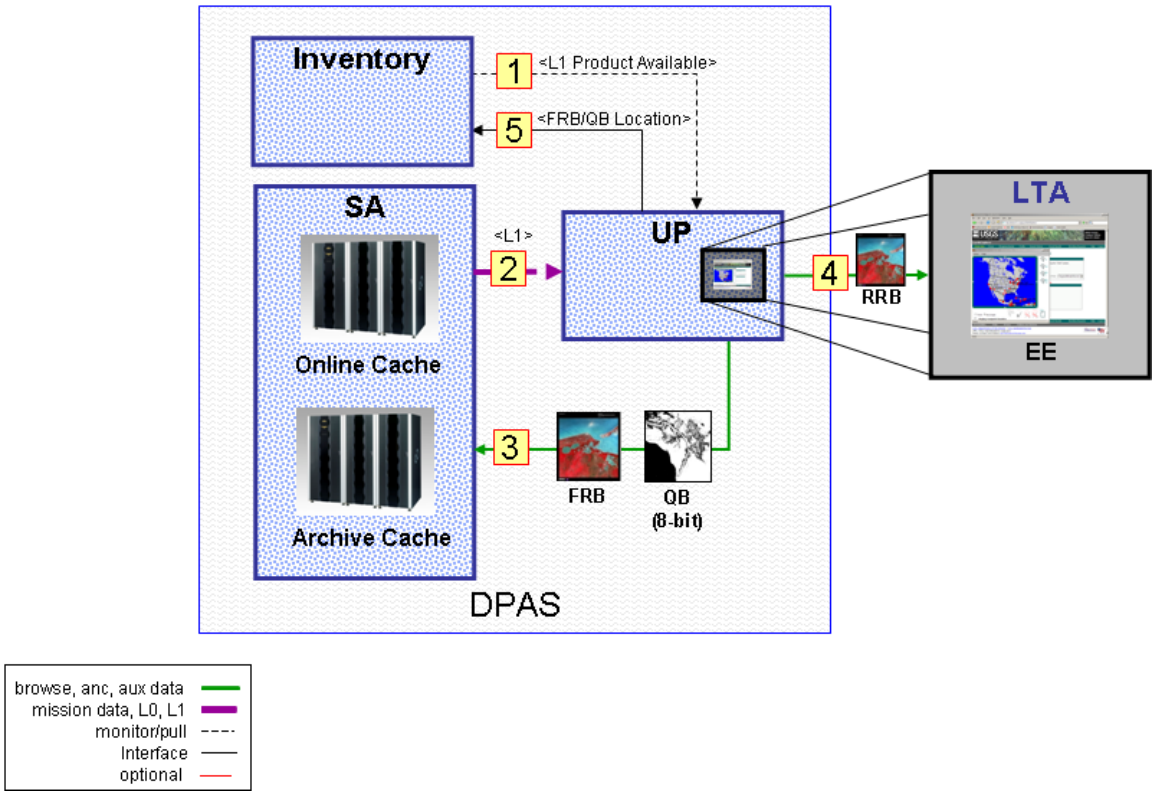

Figure 27 Browse Generation

Step	Description
1	Whenever an L1 product is entered into the Inventory Subsystem, UP Subsystem will check for the existence of associated browse data, and will generate browse if needed.
2	The L1 product is read from the Online Cache and a FRB and RRB are generated.
3	The FRB and (8-bit) QB are placed on the Online Cache and the Archive Cache.
4	The RRB is pushed to EE.
5	The UP Subsystem updates the Inventory Subsystem with the location of the FRB and (8-bit) QB in the Online Cache. At this point, the L1 product is now available for distribution. (See *5.7.2 Search & Order*).

5.3 On-Demand Processing

The Online Cache within the DPAS will be a rolling cache. That is, products are kept there for download for a required length of time, and then are "rolled off" to make space for new products. This concept (shown below) is based on historical Landsat product access trends. When a product is removed from the Online Cache, its associated browse and metadata information remain available for selection by a user. If selected, the product is recreated on-demand for the user. This mechanism applies to both L0Rp and L1 products. In this scenario, the two LTA enterprise components are shown: the EE, and the TRAM systems.

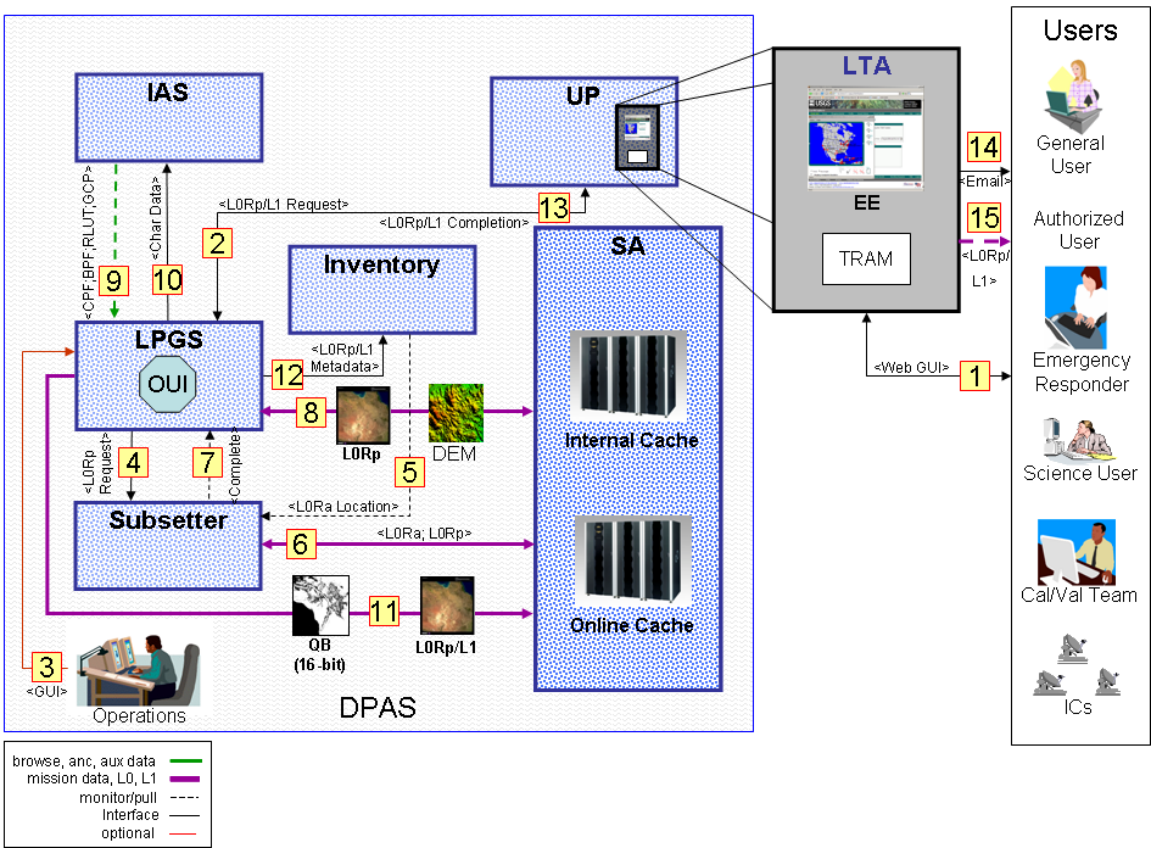

Figure 28 On-Demand Processing

Step	Description
1	The user selects a product through the EE. If the selected standard product (L0Rp or L1) is not available for immediate delivery from the Online Cache, an on-demand order is created. Depending on the privileges of the registered user the on-demand order may be submitted as a priority order. The EE submits the user's product request to the UP Subsystem (TRAM) system.
2	The UP Subsystem (TRAM) submits a product request to the LPGS.
3	**OPTIONAL:** Before processing has started, Operations may manually reprioritize product requests in the LPGS processing queue through the LPGS Operator User Interface (OUI). This capability allows Operations to control the production queue and

	accommodate priority processing requests.
4	The LPGS invokes the Subsetter Subsystem to extract a scene (L0Rp) from the specified L0Ra.
5	The Subsetter Subsystem pulls scene extent information and L0Ra file location from the Inventory Subsystem.
6	The Subsetter Subsystem reads the L0Ra data from the Internal Cache and writes the L0Rp data to the Internal Cache.
7	The LPGS monitors the Subsetter Subsystem database to determine subset completion and L0Rp data location. For L0Rp on-demand products, the LPGS skips to step #11.
8	The LPGS calculates the DEM required for the L1 product and reads the DEM and L0Rp data from the Internal Cache. The LPGS writes intermediate processing files to the Internal Cache.
9	The LPGS pulls the required CPF, BPF, RLUT, and GCP data from the IAS for the L1 product.
10	During processing of the standard product, select characterization data is collected and provided to the IAS. Off-nadir characterization data is flagged for identification.
11	**FOR L1 PRODUCTS:** The LPGS creates a 16-bit Quality Band (QB) for the product. A terrain occlusion mask is generated and included in the QB to indicate where imagery is occluded due to terrain effects. The 16-bit QB is written to the Online Cache for distribution with the L1 product (as compared to the 8-bit QB that is distributed with the FRB; see *5.2.3 Browse Generation*). The LPGS places the products (L0Rp, L1, or both) on the Online Cache for distribution, and deletes intermediate processing files from the Internal Cache.
12	The LPGS updates the Inventory Subsystem with product metadata. Off-nadir products are flagged as part of the L0Rp and L1 metadata. **FOR L1 PRODUCTS:** The UP Subsystem checks to see if the FRB and 8-bit QB exist for the L1 product, and generates them if needed. (Browse and 8-bit QB files may have been deleted due to a problem (see *5.5.3 Data Manager Interaction* and *5.2.3 Browse Generation*)).
13	The LPGS notifies the UP Subsystem (TRAM) that the standard product processing was completed.
14	The UP Subsystem sends an email to the user with the location of the L0Rp or L1 products for the user to download.
15	The recreated product is downloaded by the user.

5.4 Mission Data Reprocessing

Although not expected, if a problem is found with the L0Ra data, it may be necessary to reprocess the Mission Data and create new L0Ra data to correct the problem. In this case, Mission Data is restaged to the Archive Cache, and (re)ingested to produce a new version of the L0Ra data. Removal of the old L0Ra data and associated metadata is at the discretion of the Data Manager (DM).

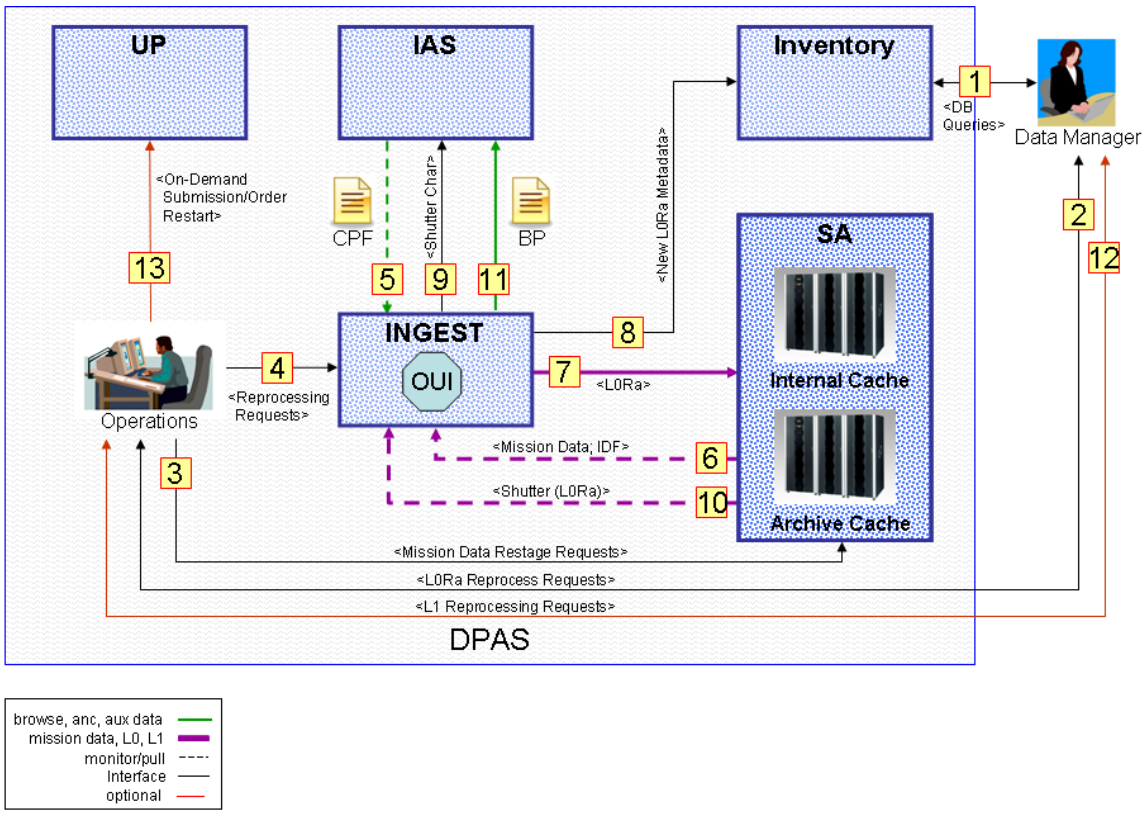

Figure 29 Mission Data Reprocessing

Step	Description
1	A problem is identified with the L0Ra data. The Data Manager (DM) interacts with the Inventory Subsystem and sets those L0Ra affected as no longer available. Depending on the nature of the problem, the DM may also remove L1 products from the Online Cache, updating the Inventory Subsystem accordingly. This in turn implies that the L1 removed is now only available via an on-demand request (see *5.3 On-Demand Processing*). On-demand requests for those L1 products removed have to wait for the missing L0Ra to be reprocessed. Since this wait could be much longer than an on-demand request for which the L0Ra data exists in the Internal Cache (it wasn't removed), the requester is made aware of the delay due to the need to reprocess the L0Ra via an indicator in the Inventory Subsystem (as set by the DM). In the case where the Subsetter Subsystem is invoked for L0Ra data that is no longer available, it will return a status indicating that the L0Ra data isn't available (as set in the Inventory

	Subsystem). The LPGS and IAS Subsystems will in turn place L1 product requests that need the missing L0Ra data into a hold state, pending completion of their reprocessing (see Step #13).
2	The DM interacts with Operations to reprocess the L0Ra data. This communication includes a preferred reprocessing order (if any).
3	Operations submits a request to the SA to pre-stage the data to the Archive Cache. (The pre-stage ensures efficient use of Archive media and robotics.)
4	Operations manually submit reprocessing requests of Mission Data through the Operator User Interface (OUI) of the Ingest Subsystem.
5	The Ingest Subsystem retrieves the appropriate CPF from the IAS for processing the Mission Data.
6	The Ingest Subsystem reads the Mission Data from the temporary work area of the Archive Cache. Part of the Mission Data is the Interval Definition File (IDF) that was originally archived as part of Ingest Subsystem processing. (See *5.2.1 Ingest Subsystem Mission Data*)
7	The Ingest Subsystem writes a new version of the L0Ra on the Internal Cache. (The deletion or retention of the original L0Ra is left to Data Management personnel. (See *4.2.2 Data Management Personnel* and *5.5.3 Data Manager Interaction*)
8	The Ingest Subsystem writes the interval and scene metadata and location of the L0Ra data to the Inventory Subsystem. The new L0Ra is also assigned a new version number. (The Subsetter Subsystem will use the latest version when invoked.)
9	**SHUTTER DATA ONLY:** The Ingest Subsystem characterizes the shutter data and places that characterization data in the IAS characterization database.
10	**SHUTTER DATA ONLY:** The Ingest Subsystem retrieves previous shutter collects from the Archive Cache.
11	**SHUTTER DATA ONLY:** The Ingest Subsystem calculates BPs from the new and previous shutter collects and places them in the IAS database. When BPs are extracted from the IAS database for use by LPGS or ICs, a Bias Parameter File (BPF) is created.
12	**OPTIONAL:** If needed, the DM will coordinate with Operations for the recreation of L1 products (see Step #1), based on demand or need (e.g. emergency response).
13	**OPTIONAL:** If requested by the DM, Operations manually submits on-demand orders for processing scenes from the reprocessed L0Ra data (see *5.3 On-Demand Processing*). In addition, Operations will restart L1 product requests in LPGS and IAS that went into a hold state pending the reprocessing of the L0Ra data (from Step #1).

5.5 Data Management

5.5.1 Archive Management

The DPAS has a requirement to archive all mission critical data. This includes Mission Data, browse data, 16-bit QB, pre-launch data, and milestone backups (algorithms, software applications, database, and documentation). An important part of data stewardship, proper archive management ensures the long term preservation of data. For the DPAS, this requirement takes the form of three data archives, which are depicted below. The Operational Archive, represented by the Sun StorageTek SL8500, is a nearline storage capability which is interfaced via the Archive Cache. The Backup Archive, represented as the EROS basement, is an off-line storage capability that is accessed in the event of a media failure, and is the on-site, immediate fail-over capability. The Offsite Archive, represented as the National Archive and Records Administration (NARA) facility in Kansas City, is an off-line, off-site storage capability intended for catastrophic recovery. The SL8500 is an enterprise component of the LTA project, and is accessed via a network connection, and is otherwise encapsulated by the SA Subsystem.

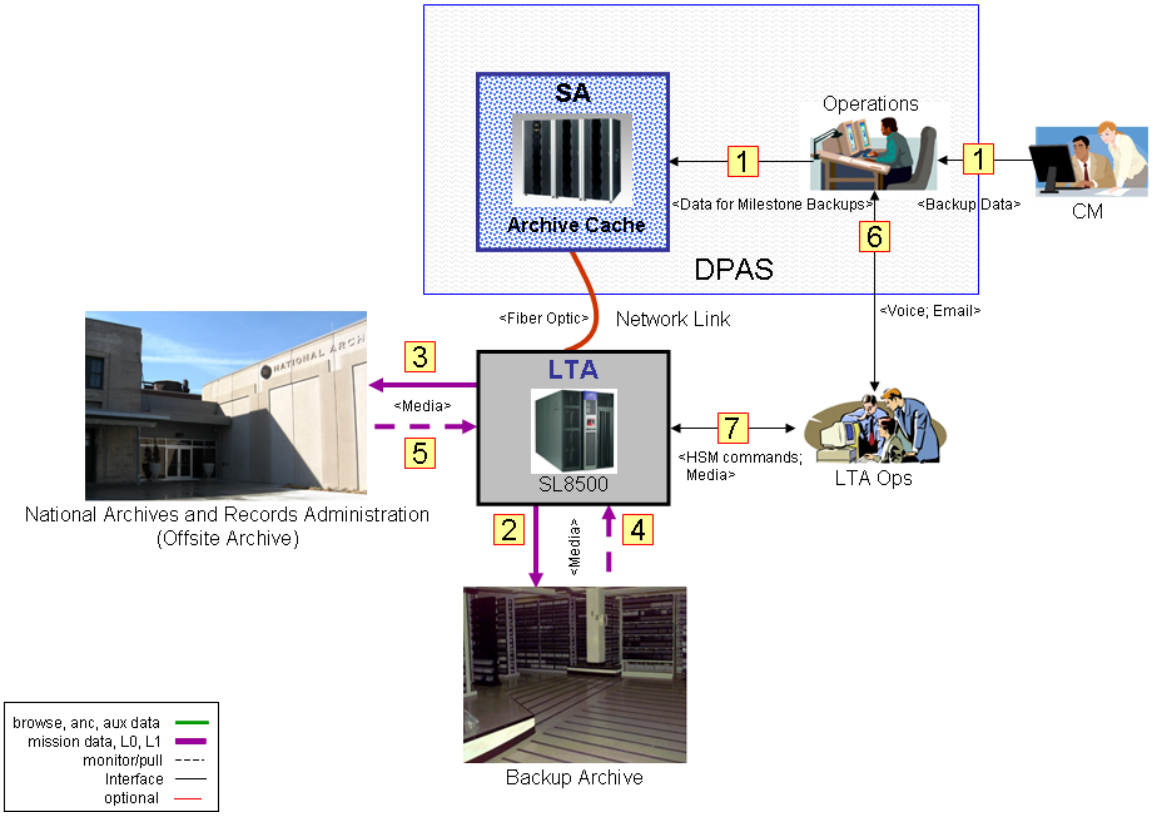

Figure 30 Archive Management

Step	Description
1	CM provides documentation, algorithms, pre-launch data, software applications, and project milestone backups to Operations for staging to the Archive Cache.
2	Media is sent to the (on-site) Backup Archive.
3	Media is sent to the Offsite Archive (NARA facility).
4	In the event of a media failure, media is retrieved from the (on-site) Backup Archive.
5	In the event of a catastrophe, media is retrieved from the Offsite Archive (NARA facility).
6	Operations and LTA Operations coordinate archive management activities. The DPAS may report anomalies/errors as a result of data retrieved from the Operational Archive. The LTA works with support personnel to determine problems with media, drives, hardware, etc. This in turn, may initiate retrieval of data from the Backup or Deep Archives.
7	The LTA Operations interacts with the LTA Archive (SL8500) to perform automated media migration, as needed. This includes both media replacement, as well as media upgrade activities.

5.5.2 Storage Management

The DPAS monitors storage resources and performs storage management as needed. Routine storage management includes rules-based removal of standard products from the Online Cache, and rules-based removal of Cal/Val products from the Internal Cache. Operations may initiate storage management activities if needed.

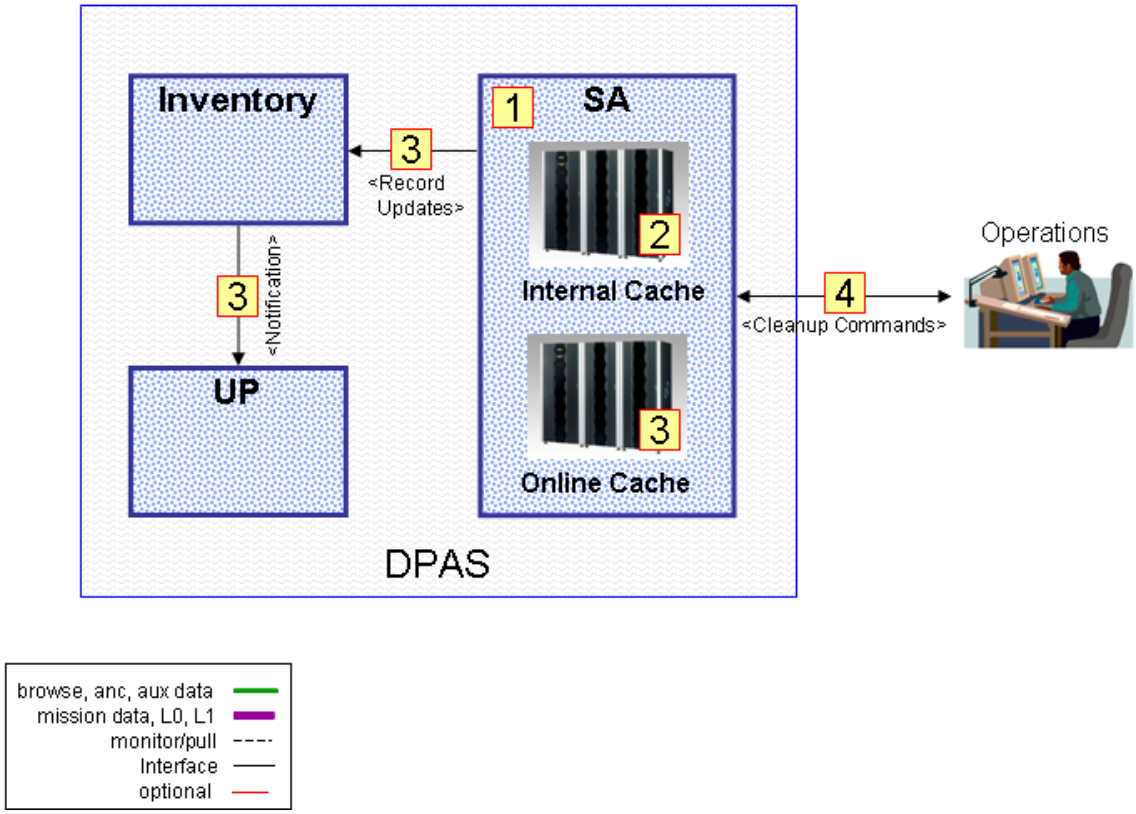

Figure 31 Storage Management

Step	Description
1	The SA periodically checks available space in the Online and Internal Caches.
2	If available space in the Internal Cache drops below the configured threshold, then the SA initiates the rules-based cleanup for the Internal Cache. Cal/Val products meeting the removal criteria are removed (older than 30 days).
3	If available space in the Online Cache drops below the configured threshold, then the SA initiates the rules-based cleanup for the Online Cache. Standard products meeting the removal criteria are identified, SA updates their associated records in the Inventory Subsystem to indicate product removal, the Inventory Subsystem notifies the UP Subsystem of product removal, and the products are removed from the Online Cache. (The criteria for product removal from the Online Cache are configurable and may include product creation data, last access date, and cloud cover score.)
4	Operations may manually invoke the appropriate cache cleanup capability if additional space is needed, or contact other DPAS support staff for further analysis.

5.5.3 Data Manager Interaction

The Data Manager (DM) interacts with the DPAS to perform reporting, data management, and data policy functions for the MMO. The DM helps to resolve data and metadata problems that may be detected or reported, and may manually update metadata and request reprocessing and/or removal of problem products.

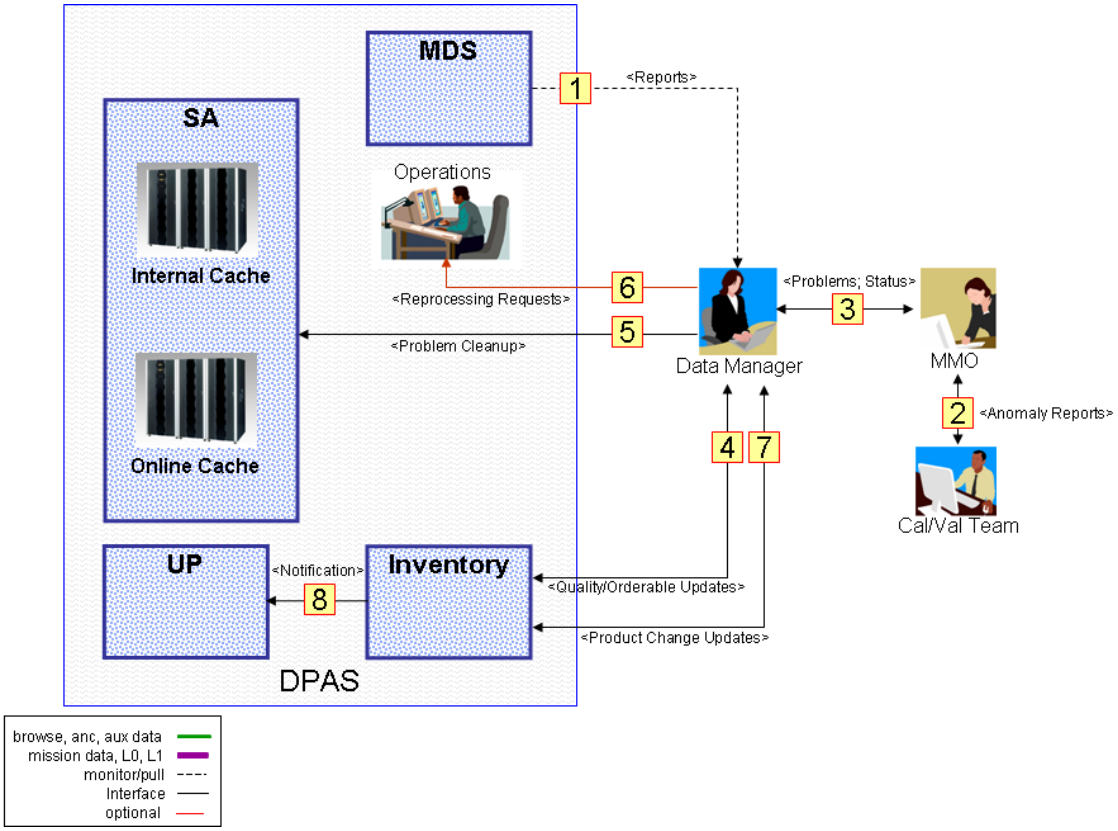

Figure 32 Data Manager Interaction

Step	Description
1	The DM utilizes the MDS for standard and ad-hoc reporting.
2	The Cal/Val Team (CVT) investigates product anomalies and reports its findings to the MMO.
3	The DM interacts with the MMO on product problem resolution, as well as reporting and data management status.
4	The DM interacts with the Inventory Subsystem and sets/resets quality and orderable record fields, ensures the integrity of the database records, and retrieves information about reprocessing needs.
5	If a problem is detected in a standard product, 8-bit QB, or FRB, the DM will initiate a special parameter-based cleanup to remove the problem product or data from the Online

	Cache. (Problem products and/or data will be recreated on-demand as needed (see *5.3 On-Demand Processing*)).
6	**OPTIONAL:** In the event that a problem is detected with L0Ra data, the DM will update the Inventory Subsystem and coordinate reprocessing with Operations (see *5.4 Mission Data Reprocessing*).
7	The DM updates the Inventory Subsystem for product management changes.
8	The Inventory Subsystem notifies the UP Subsystem of product changes.

5.6 Reporting (MDS)

5.6.1 Metrics Reporting

A key tool for the MMO, the MDS collects metrics from the Subsystems of the DPAS and GNE, in order to generate standard and ad-hoc queries and reports in support of the mission. In this manner, the MDS acts as a data warehouse for the DPAS.

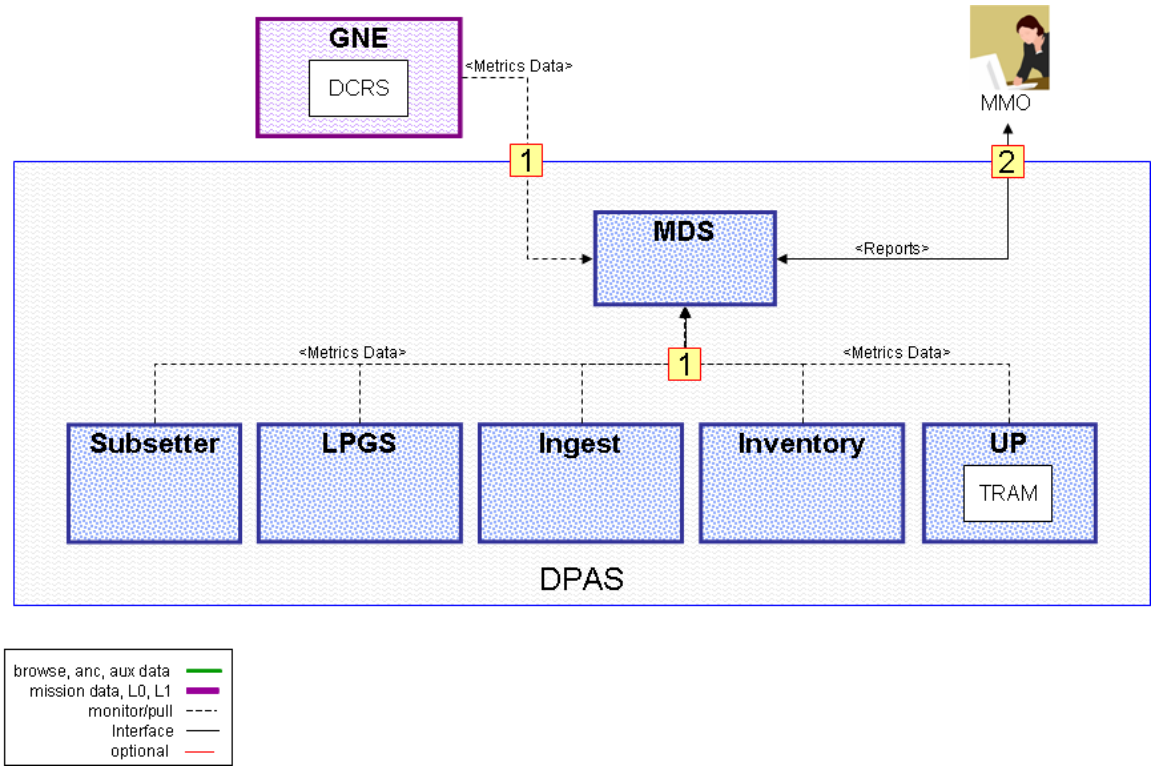

Figure 33 Metrics Reporting

Step	Description
1	The MDS pulls metrics from the databases of the DPAS Subsystems, and GNE. This data pull occurs at least daily and is configurable.
2	The MMO interacts with the MDS to execute standard reports and perform ad-hoc queries.

5.6.2 Collection Reconciliation

Collection reconciliation is performed by the MMO to ensure that the holdings within the DPAS and those at an IC are consistent with scheduled collections and actual collections.

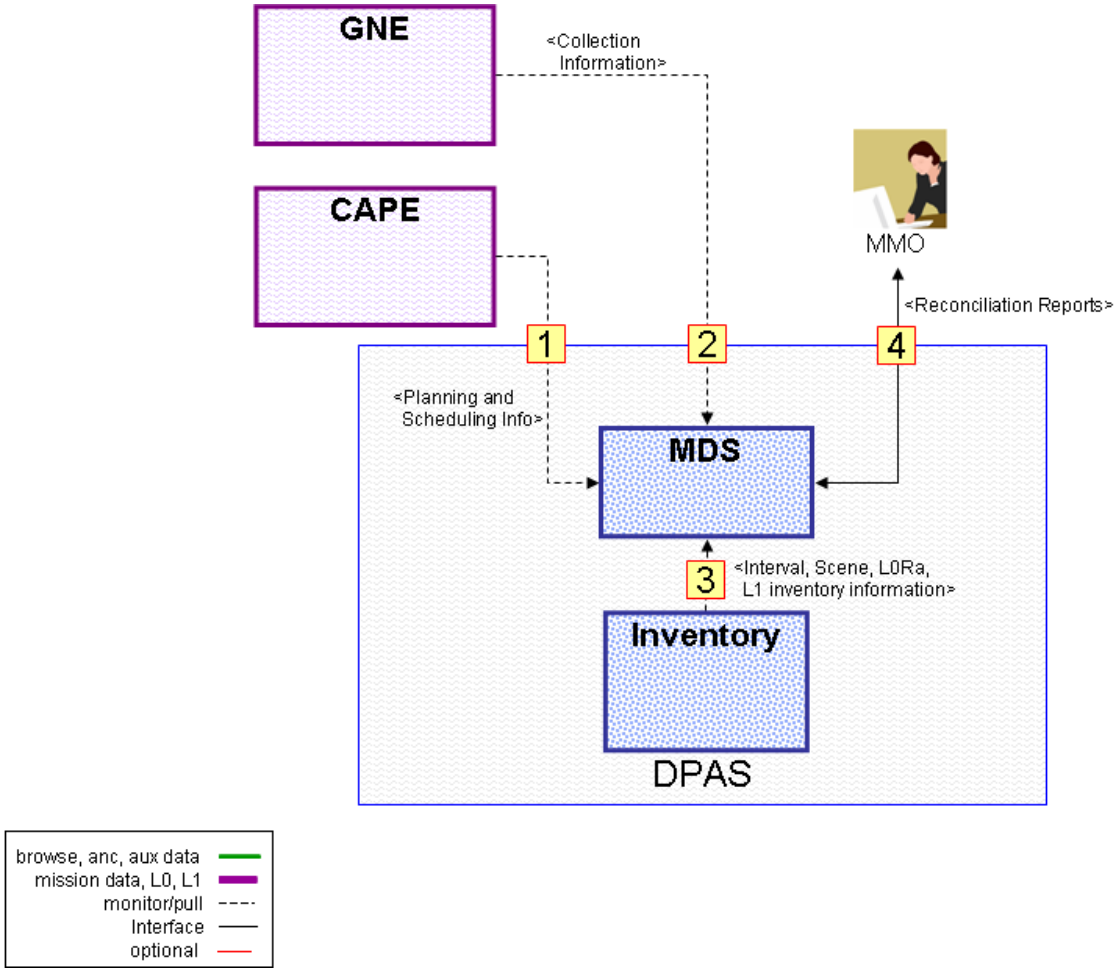

Figure 34 Collection Reconciliation

Step	Description
1	The MDS pulls planning and scheduling information from the Collection Activity Planning Element (CAPE).
2	The MDS pulls Mission Data collection information (actual) from the DCRS of the GNE.
3	The MDS pulls interval, scene, L0Ra, and L1 inventory information from the Inventory Subsystem.
4	The MMO interacts with the MDS to receive collection reconciliation reports.

5.7 User Portal Subsystem

5.7.1 Registration

To download products or submit collection requests, a user must be authenticated. The registration process provides a mechanism for the assignment of user roles and permissions, and allows for demographic information to be gathered about product distribution and system usage.

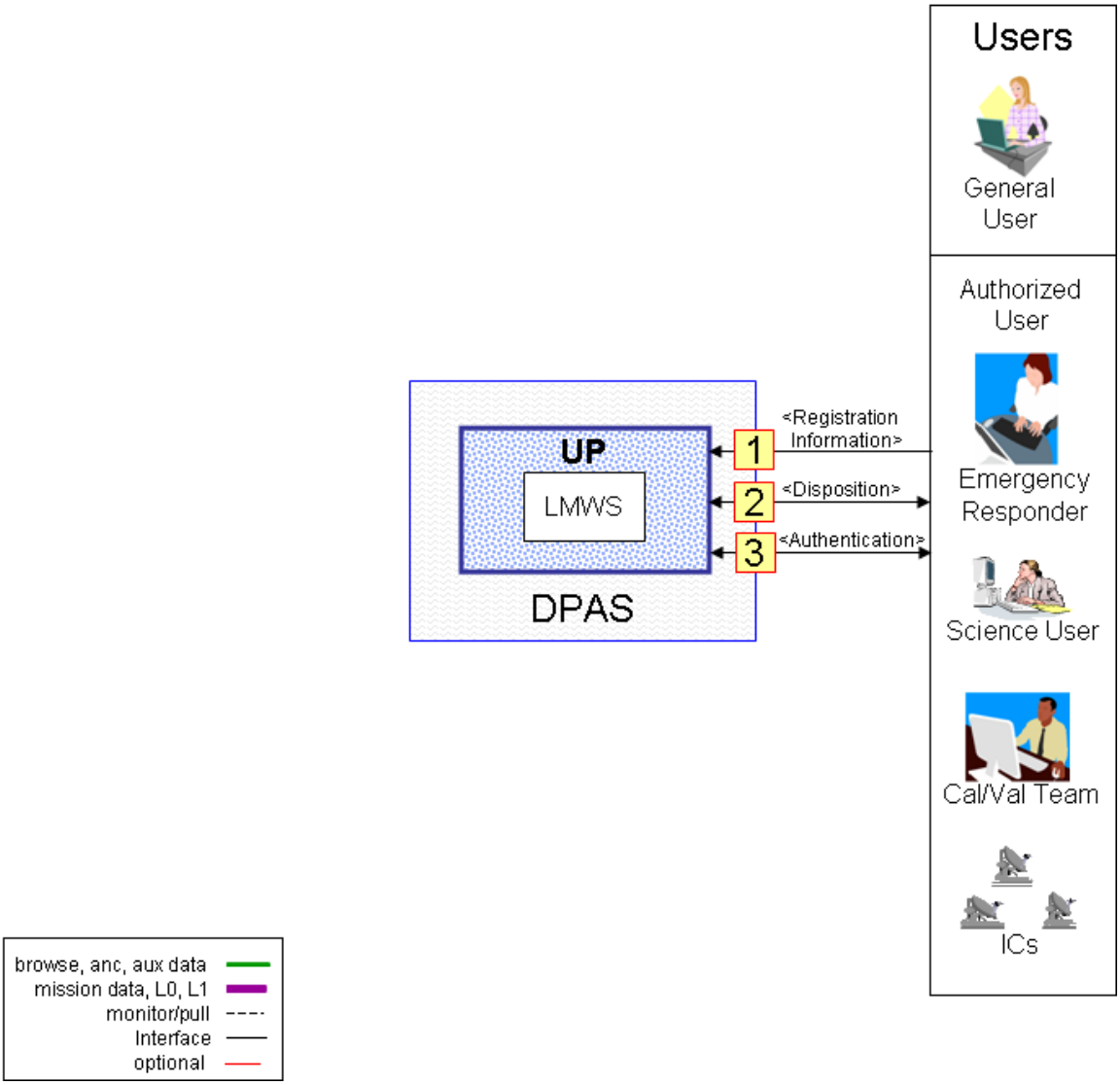

Figure 35 Registration

Step	Description
1	Users interact with the UP Subsystem to provide registration information.
2	The UP Subsystem dispositions registration requests (either success or failure).
3	The user is authenticated and is authorized to access UP Subsystem components (for collection requests, product orders, etc). (See *5.7.2 Search & Order*, *5.7.3 Information Dissemination*, and *5.7.4 Collection Request*)

5.7.2 Search & Order

A fundamental capability of the DPAS, search and order represents the capability for a data user to search the holdings of the DPAS, utilizing product metadata and browse imagery to find and select desired data for download. Two mechanisms within the UP Subsystem support this: the Earth Explorer (EE) application, and support for Standards Based Clients (e.g. OGC, Keyhole Markup Language (KML)).

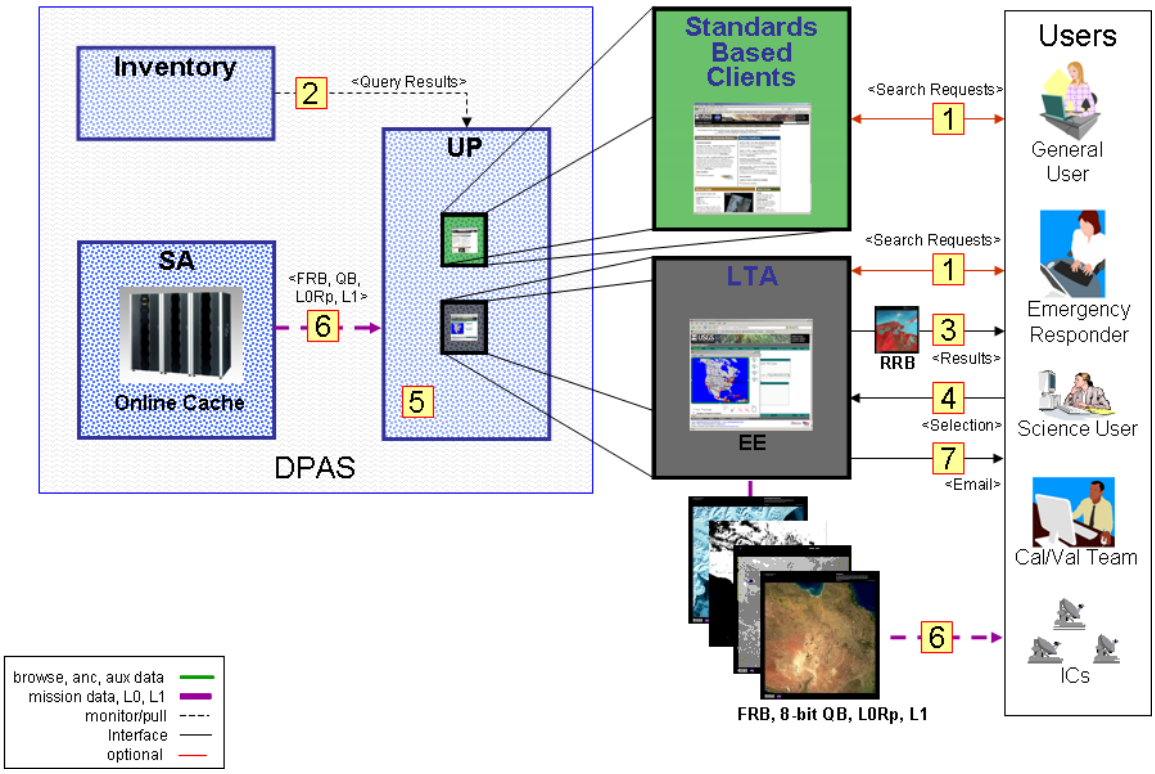

Figure 36 Search & Order

Step	Description
1	A user is authenticated (via *5.7.1Registration*) and submits a search request – (text, spatial, graphic extent, temporal). **Note:** Authentication is only required for product download.
2	The UP Subsystem translates the interactive selection criteria into a query to the Inventory Subsystem, based on search parameters and user access rights.
3	The UP Subsystem marshals the results and returns them to the user, including the RRB. Off-nadir scenes are indicated in the results.
4	The user selects FRB, 8-bit QB, L0Rp, or L1 products using the query results.
5	Selected FRB, QB, L0Rp, or L1 products are pulled from the Online Cache. If L0Rp or L1 are not available an on-demand order (see *5.3 On-Demand Processing*) is made.

6	For immediately available data, the FRB, 8-bit QB, L0Rp, or L1 products are downloaded by the user.
7	For on-demand products, an email is sent to the user with the location of the L0Rp or L1 products for the user to download.

5.7.3 Information Dissemination

Information dissemination for the DPAS is focused on information that is desirable to users for their studies, new product development, or the current mission status. Information is disseminated based on USGS policy, with information available to users according to their specific authorization. For the DPAS, the UP Subsystem is the exclusive interface for these user requests.

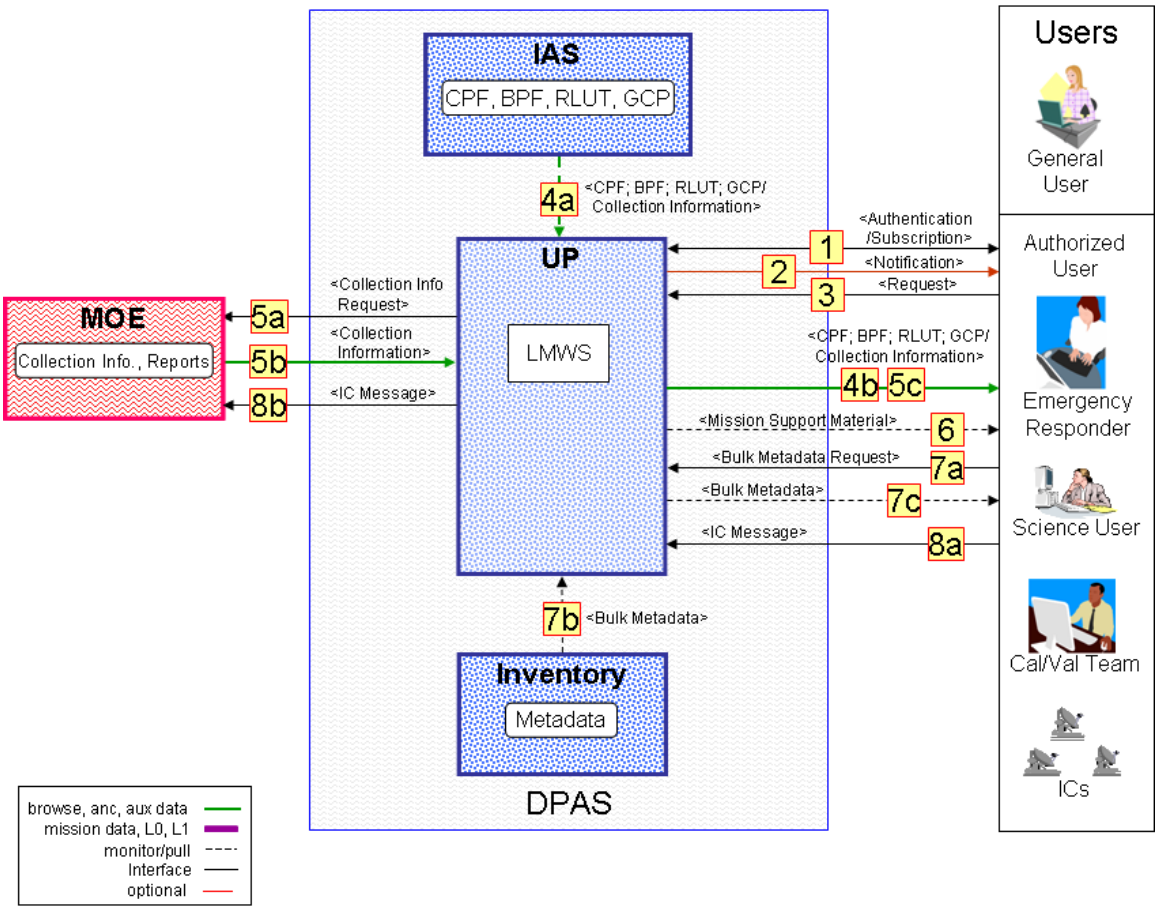

Figure 37 Information Dissemination

Step	Description
1	The user is authenticated (via 5.7.1 *Registration*) and optionally subscribes for notifications for new mission information, new CPF, BPF, etc.
2	Notification is sent to the user, based on subscription criteria.
3	The user requests CPF, BPF, RLUT, GCP, MOE collection information and reports, or Mission Support material (Cal/Val reports, DFCB, Instrument Status, other links, Algorithm Design Description (ADD), software, etc.).
4a	The UP Subsystem pulls the requested CPF/BPF/RLUT/GCP from the IAS.
4b	The CPF/BPF/RLUT/GCP is provided to the user
5a	The UP Subsystem requests MOE collection information and reports from the MOE.
5b	The MOE returns the MOE collection information and reports to the UP Subsystem.

5c	The UP Subsystem provides MOE collection information and reports to the user.
6	Mission Support material (Cal/Val reports, DFCB, Instrument Status, other links, Algorithm Design Description (ADD), software, etc.) is provided to the user through the LMWS.
7a	The user requests a bulk metadata distribution.
7b	The UP Subsystem pulls the requested bulk metadata from the Inventory Subsystem.
7c	The user receives the requested bulk metadata from the UP Subsystem.
8a	The IC submits communication messages (problem report, station description, administration message, etc.) to the UP Subsystem.
8b	The UP Subsystem forwards communication messages from the IC to the MOE.

5.7.4 Collection Request

Collection requests allow an authorized user to submit requests to the CAPE. The CAPE will include such requests in its scheduling activity and will respond to status and cancellation requests by a user. For security reasons, the UP Subsystem acts as a broker to the CAPE, and is the sole interface to users for the CAPE. Inclusion of requested collections in the schedule activity is up to the CAPE.

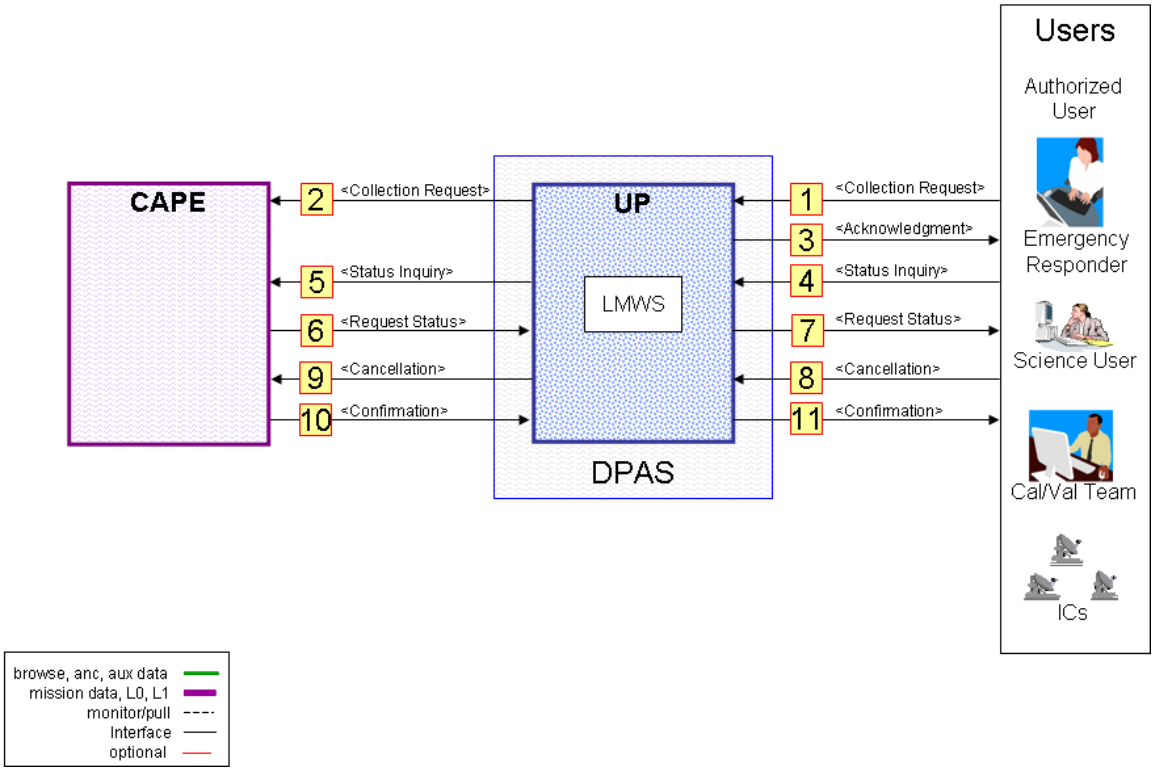

Figure 38 Collection Request

Step	Description
1	The user is authenticated (via *5.7.1 Registration*) and makes a collection request using Area of Interest (AOI) and other criteria, provided by the UP Subsystem.
2	The user's collection request is sent to the CAPE.
3	The UP Subsystem acknowledges the receipt of the user's collection request.
4	The user requests status of the collection request.
5	The UP Subsystem requests the status of the user's collection request from the CAPE.
6	The CAPE provides the collection request status results to the UP Subsystem.
7	The collection request status is provided to the user. **NOTE:** The user can also obtain

	the Confirmed Contact Schedule from the UP Subsystem (see *5.7.3 Information Dissemination*).
8	The user requests the cancellation of a collection request.
9	The collection cancellation request is sent to the CAPE.
10	The CAPE then confirms the cancellation to the UP Subsystem.
11	The UP Subsystem provides the cancellation confirmation to the user.

5.8 Calibration Validation Operations

5.8.1 Calibration/Validation (Cal/Val) Processing

Another key requirement of the DPAS is support for calibration and validation operations. The focus of this support for the DPAS is the IAS. The IAS provides image processing capabilities specific to the needs of Cal/Val operations, and is the primary tool of the Cal/Val Team for product assessment.

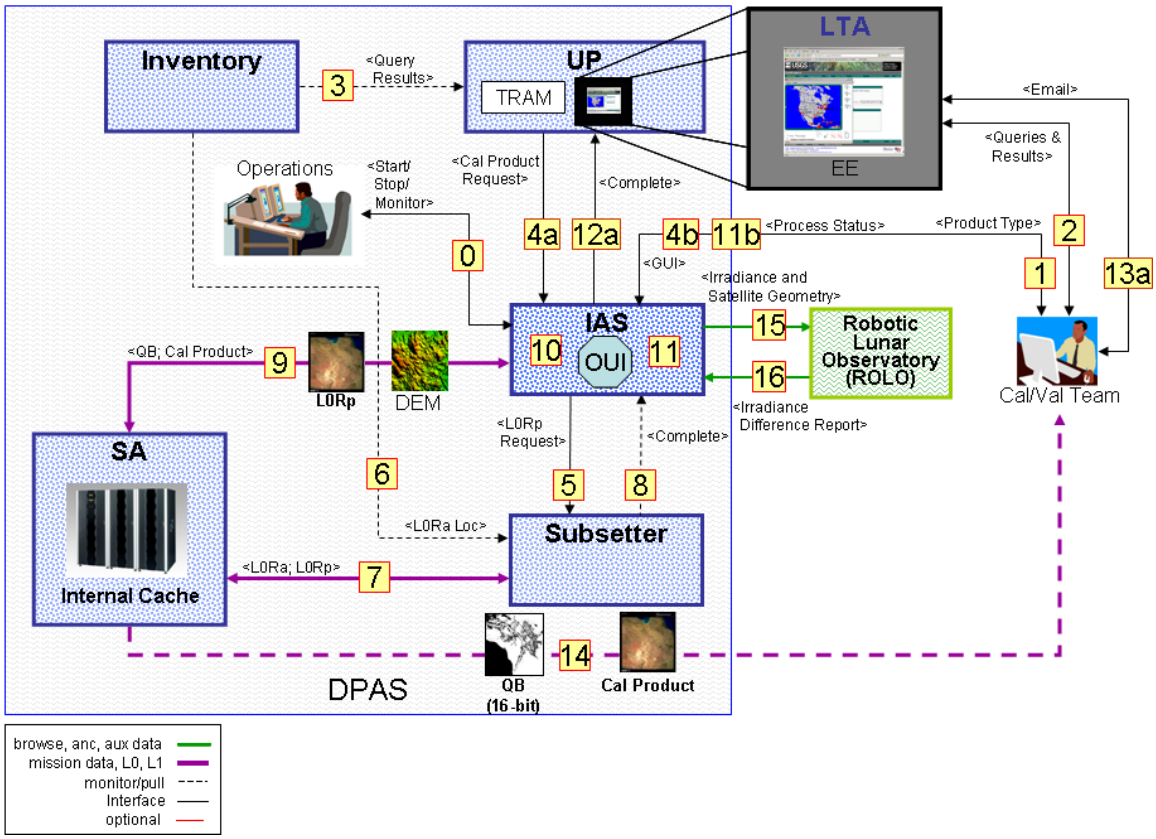

Figure 39 Cal/Val Processing

Step	Description
0	Operations staff starts, stops, and monitors the IAS for the Cal/Val Team (CVT). Monitoring includes disk space thresholds and processing log errors. In the event of disk space shortage, Operations will invoke a rules based clean up capability (see *5.5.2 Storage Management*). For processing errors, Operations will communicate such errors to the CVT.
1	The CVT creates a product type in the IAS. These product types are used for standing orders or standard Cal/Val processing, and contain static parameters.
2	The CVT interacts with the EE portion of UP Subsystem for data searching and ordering.
3	The UP Subsystem queries the Inventory Subsystem as needed.
4a	**For Predefined Product Type Requests:** The CVT submits a request for a calibration

	product based on the product type created in Step #1. This request is forwarded by the UP Subsystem (TRAM) to the IAS for processing. **NOTE:** This could also be a standing order.
4b	**For Interactive Requests:** The CVT interacts with the IAS Operator User Interface (OUI) to submit a product request. Unlike the predefined product type (Step #1), the OUI allows the CVT to change any parameter (including processing steps) in a product request.
5	The IAS invokes the Subsetter Subsystem to extract a scene (L0Rp) from the specified L0Ra. If a L0Ra is requested (i.e. interval data, lunar, solar, etc.), the Subsetter Subsystem will return the entire L0Ra.
6	For L0Rp requests, the Subsetter Subsystem pulls scene extent information from the Inventory Subsystem.
7	The Subsetter Subsystem reads the L0Ra data from the Internal Cache and writes the L0Rp data to the Internal Cache.
8	The IAS monitors the Subsetter Subsystem database for subset completion and L0Rp data location.
9	The IAS calculates the DEM required for the L1 product from the L0Rp and reads the DEM data from the Internal Cache. The IAS writes intermediate processing files to the Internal Cache.
10	The IAS retrieves the required CPF, BPF, RLUT, and GCP data from itself.
11	During processing, select characterization data is collected and stored in the IAS database. Off-nadir characterization data is flagged for identification.
12a	The IAS notifies the UP Subsystem (TRAM) of process completion.
12b	The CVT monitors the IAS OUI for process completion.
13a	The UP Subsystem notifies the CVT of product availability.
14	The CVT retrieves the product from the Internal Cache. For L1 products, a 16-bit QB is optionally generated and provided to the CVT with the Cal Product, depending on product parameters (Step #1 or Step #4b).
15	For Lunar calibration, the lunar irradiance and satellite geometric position are sent to the RObotic Lunar Observatory (ROLO).
16	The ROLO sends the lunar irradiance difference report which is ingested into the IAS characterization database.

5.8.2 Calibration Parameter Generation

A critical part of geometric and radiometric corrections is the generation of CPs by the Cal/Val Team (CVT). Characterization data, generated during Level 0 (L0) and L1 processing, is collected in the IAS database and is used to generate calibration parameters. In addition, the RLUT is also created as a component of the CPs.

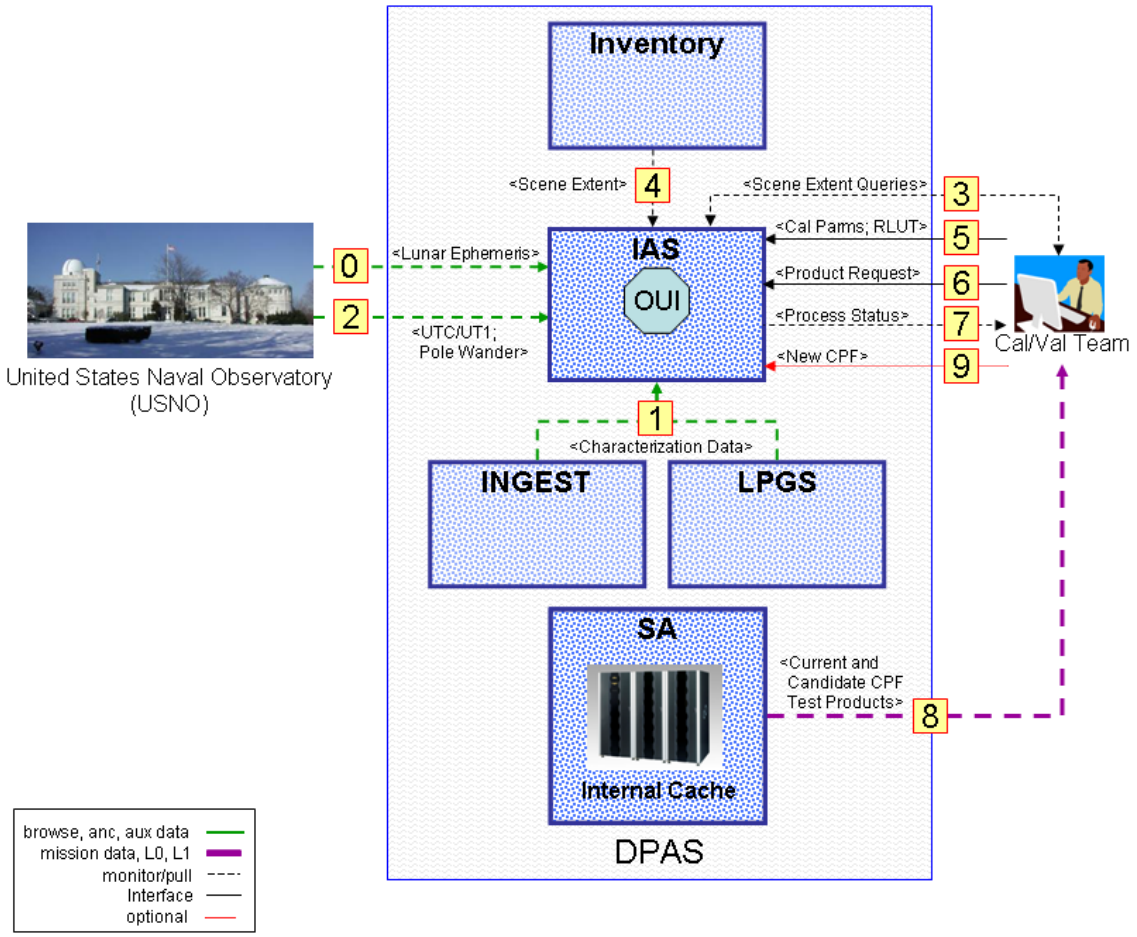

Figure 40 Calibration Parameter Generation

Step	Description
0	At the start of the mission, prior to nominal operations, lunar ephemeris data is pulled from the United States Naval Observatory (USNO) and stored in the IAS.
1	Characterization data is generated during LPGS, Ingest Subsystem, and IAS processing and is provided to the IAS characterization database. Off-nadir characterization data is not used for trending calculations.
2	Universal Time (UT1)/Coordinate Universal Time (UTC) and Pole Wander are extracted from the USNO and are used in the development of the new CPs.
3	The Cal/Val Team (CVT) utilizes the IAS Operator User Interface (OUI) to perform scene extent queries and review results.

4	The IAS queries the Inventory Subsystem for scene extent information.
5	The CVT utilizes the characterization data to generate new CPs, including RLUT information (edit and merge capability).
6	Product requests for the current and candidate CPs are entered into the IAS for subsequent processing. (See *5.8.1 Calibration/Validation (Cal/Val) Processing*)
7	The CVT monitors the IAS OUI for order completion.
8	The CVT retrieves data from the Internal Cache and assesses the products produced with the current and candidate CPs to determine if the parameters should be published/baselined on the IAS.
9	**OPTIONAL:** The CVT publishes the new CPs in the IAS database. The new CPs are then used as part of ingest (see *5.2.1 Ingest Subsystem Mission Data*) and standard product (see *5.2.2 Standard Product Generation)* processing.

5.9 International Cooperators (ICs)

5.9.1 Exchange & Validation Data Ingest Subsystem

A key activity with International Cooperators, exchange data ingest occurs when an IC provides Mission Data to the DPAS, for inclusion into the operational system. As part of this agreement, IC data must first be validated by the DQA. After this, data exchanges can occur in larger amounts. Product validation is also performed and involves the DQA comparing the product data provided by the IC with an identical product generated by the DPAS. To be valid exchange or validation data, an IC must adhere to the appropriate (i.e. Mission Data, L1) DFCB.

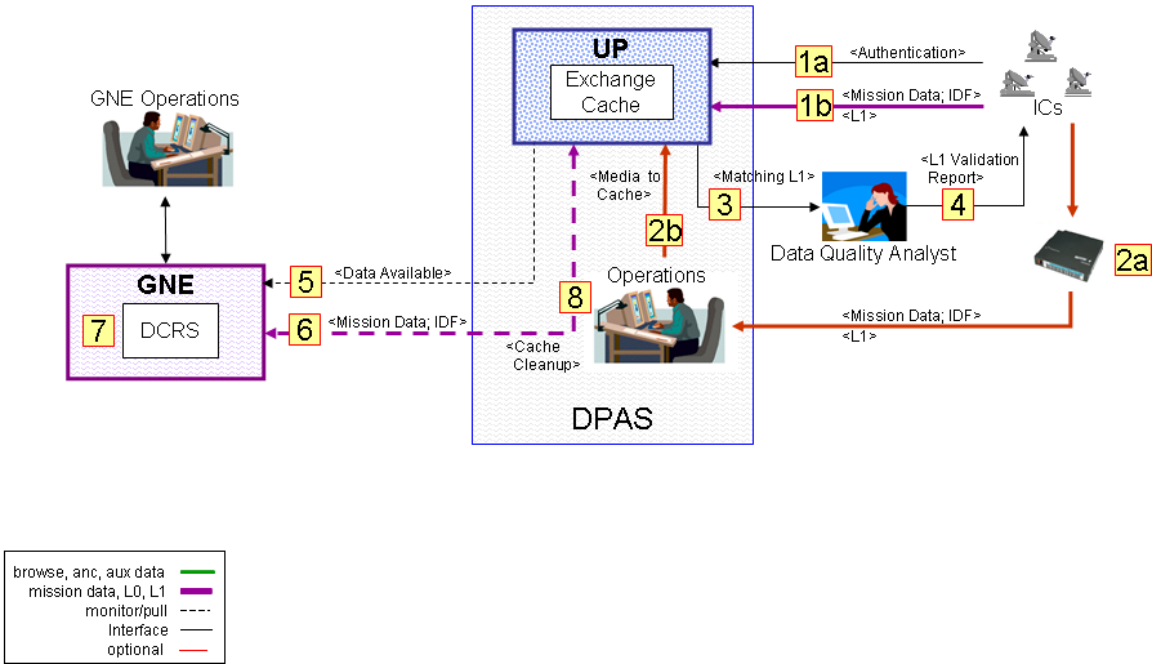

Figure 41 Exchange & Validation Data Ingest Subsystem

Step	Description
1a	An IC is authenticated (via *5.7.1 Registration*) for electronic transfer.
1b	An IC pushes Mission Data and associated IDF(s), or Product Validation Data (a L1 product created by the IC) to the Exchange Cache of the UP Subsystem.
2a	Alternatively, the IC sends media containing Mission Data and associated IDF(s), or Product Validation Data to the DQA which is provided to Operations.
2b	Operations stages the data from media to the Exchange Cache of the UP Subsystem.
3	**For Product Validation:** The DQA downloads the matching product from the Online Cache (if available), or places an on-demand order for the product if not (see *5.7.2 Search & Order* and *5.3 On-Demand Processing*).
4	**For Product Validation:** The DQA performs validation analysis on the validation product and the standard product from the Online Cache and reports the results of the validation analysis to the IC.

5	**For Mission Data:** The UP Subsystem notifies the GNE that IC Mission Data is available.
6	**For Mission Data:** GNE Operations copies the data from the Exchange Cache of the UP Subsystem and manually initiates the ingest of the IC data. GNE Operations also identifies the IC data as exchange or validation data, which is saved in the DCRS processing database, for exchange with Ingest Subsystem.
7	**For Mission Data:** The IC Mission Data is ingested and processed (see *5.2.1 Ingest Subsystem Mission Data).* **NOTE:** Validation data is routed to the IAS (see *5.9.3 Validation Data Processing*), and exchange data is routed to the LPGS (see *5.2.2 Standard Product Generation*).
8	**For Mission Data:** After a successful ingest, GNE Operations cleans up the Exchange Cache of the UP Subsystem.

5.9.2 Exchange Data Processing

The processing of IC exchange data is functionally the same as standard product generation (see *5.2.2 Standard Product Generation*). Metadata records and file naming are used to distinguish the IC data from LGN data.

5.9.3 Validation Data Processing

For IC data to be included in data exchanges, it must first be validated by the Data Quality Analyst (DQA). After this, data exchanges can occur in larger amounts. To perform validation, the DQA interacts with the DPAS in a fashion similar to the Cal/Val Team (CVT), utilizing the Image Assessment Subsystem (IAS) to create products for evaluation (see *5.8.1 Calibration/Validation (Cal/Val) Processing*).

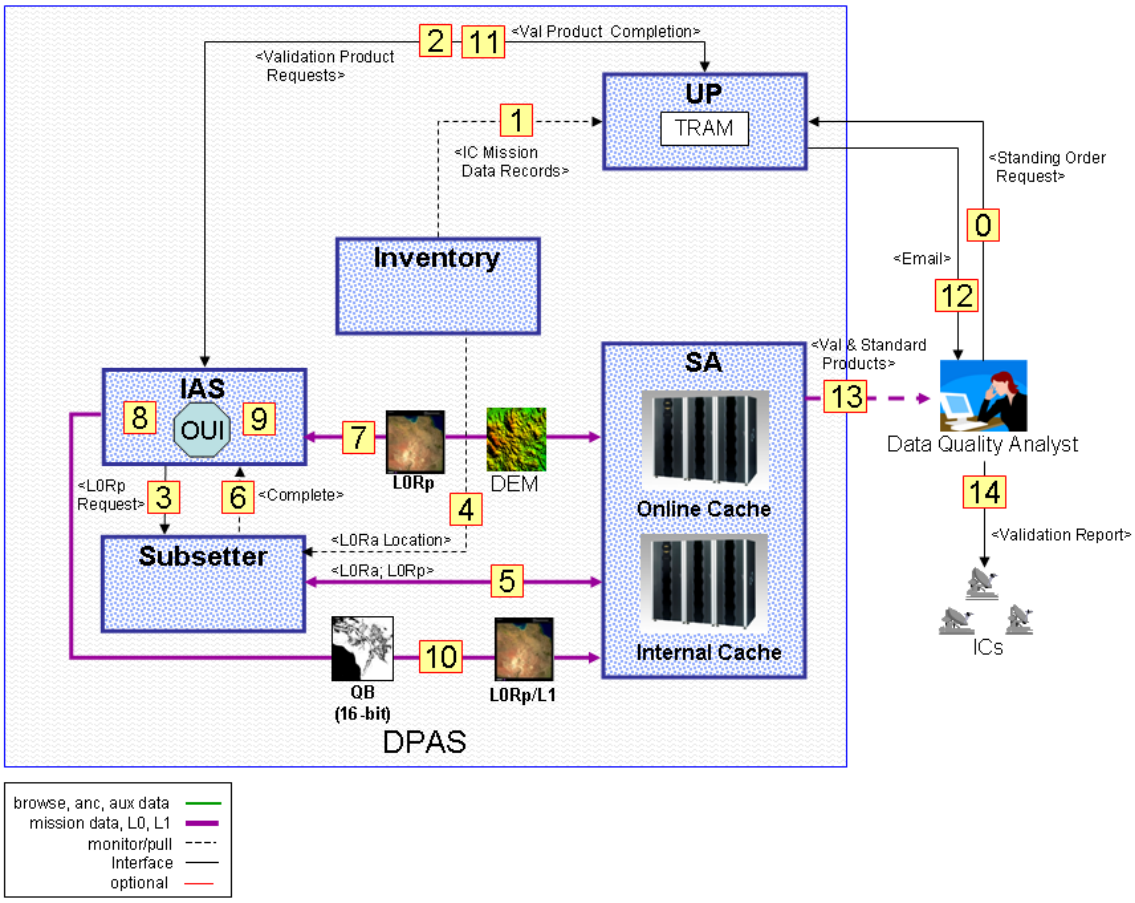

Figure 42 Validation Data Processing

Step	Description
0	The Data Quality Analyst (DQA) sets up a standing order request with the UP Subsystem for validation products.
1	As a result of validation data ingest (see *5.9.1 Exchange & Validation Data Ingest Subsystem*), records are created in the Inventory Subsystem for the IC Mission Data. This in turn triggers product requests in the UP Subsystem (TRAM), which are in turn specifically designated for the IAS.
2	The UP Subsystem (TRAM) submits validation product requests to the IAS.
3	The IAS invokes the Subsetter Subsystem to extract a scene (L0Rp) from the specified

	IC L0Ra.
4	The Subsetter Subsystem pulls scene extent information from the Inventory Subsystem.
5	The Subsetter Subsystem reads the L0Ra data from the Internal Cache of the Storage and Archive Subsystem (SA) Subsystem and writes the L0Rp data to the Internal Cache.
6	IAS monitors the Subsetter Subsystem database for subset completion and L0Rp data location.
7	The IAS calculates the DEM required for the L1 product from the L0Rp and reads the DEM data from the Internal Cache of the SA Subsystem. The IAS writes intermediate processing files to the Internal Cache.
8	The IAS retrieves the required CPF, BPF, RLUT, and GCP data from itself.
9	During processing of the standard product, select characterization data is collected and stored in the IAS database. **NOTE:** IC characterization data is flagged in the IAS database.
10	The IAS writes the L0Rp and L1 products to the Internal Cache. For L1 products, a 16-bit QB is also generated and provided to the DQA with the L1 products, if desired (Step #0).
11	The IAS notifies the UP Subsystem (TRAM) of process completion.
12	The UP Subsystem notifies the DQA of product availability.
13	The DQA retrieves the validation product from the Internal Cache, and the standard product from the Online Cache. **NOTE:** If the matching standard product is not available in the Online Cache, the DQA will submit an on-demand order to generate the product (see *5.3 On-Demand Processing*).
14	The DQA performs validation analysis on the validation and standard product set and reports the results of the validation analysis to the IC. If the validation is successful, then exchange data can be ingested and standard products generated from the IC (see *5.9.2 Exchange Data Processing*).

5.9.4 Exchange Data Distribution

The counterpart to *5.9.1 Exchange & Validation Data Ingest Subsystem*, this form of data exchange occurs when an IC requests Mission Data from the DPAS. Such requests are governed by USGS policy, and are generally limited to a downlink capture circle, or other political boundary. As with ingest exchange, delivery on media is an option.

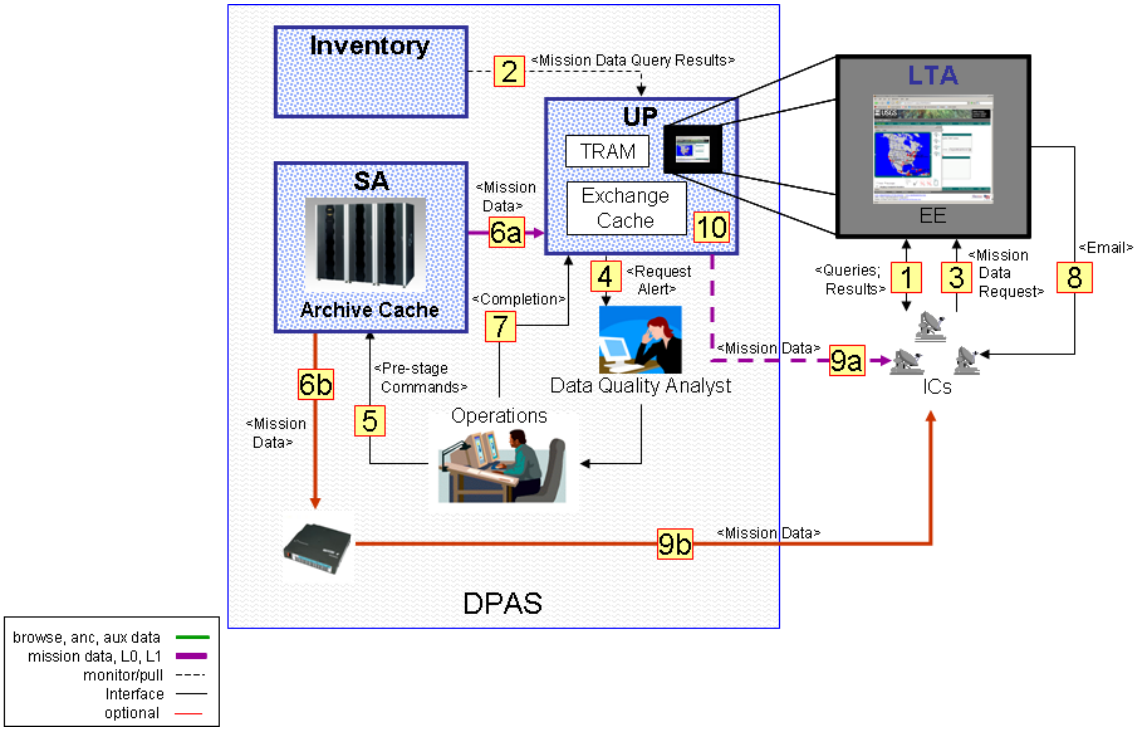

Figure 43 Exchange Data Distribution

Step	Description
1	An IC is authenticated (via *5.7.1 Registration*), and reviews the inventory of Mission Data through the UP Subsystem (EE).
2	The UP Subsystem accesses the Inventory Subsystem for the Mission Data information.
3	The IC selects and requests the Mission Data to be exchanged.
4	The UP Subsystem (TRAM) notifies the DQA of the IC request for Mission Data. The DQA coordinates with Operations to provide the requested data.
5	Operations pre-stage the Mission Data on the Archive Cache of the Storage and Archive Subsystem (SA) Subsystem. The pre-staging ensures efficient media use for retrieving the Mission Data.
6a	For electronic data transfer, Operations then copies the Mission Data to the UP Subsystem Exchange Cache.
6b	Alternatively, Operations copies the Mission Data to media.
7	Operations updates records in the UP Subsystem (TRAM) to indicate completion of the Mission Data request.

8	The UP Subsystem notifies the IC of request completion. For electronic data transfer, this notification includes a web link for data download by the IC. For media transfer, this notification states that media will be sent to the IC.
9a	For electronic data transfers, the IC pulls the requested Mission Data from the Exchange Cache of the UP Subsystem.
9b	Alternatively, Operations makes arrangements for the media to be delivered to the IC.
10	The Exchange Cache of the UP Subsystem is automatically cleaned up after a designated period of time, or manually by Operations after download confirmation is received from the IC.

5.9.5 Metadata Ingest Subsystem

The third type of data exchange, metadata ingest occurs when an IC provides collected scene information for the IC's holdings. This information is incorporated into the LDCM Mission Database (LMD) to allow data searching of the IC's holdings. This information is also used as part of overall collection reconciliation (see *5.6.2 Collection Reconciliation*).

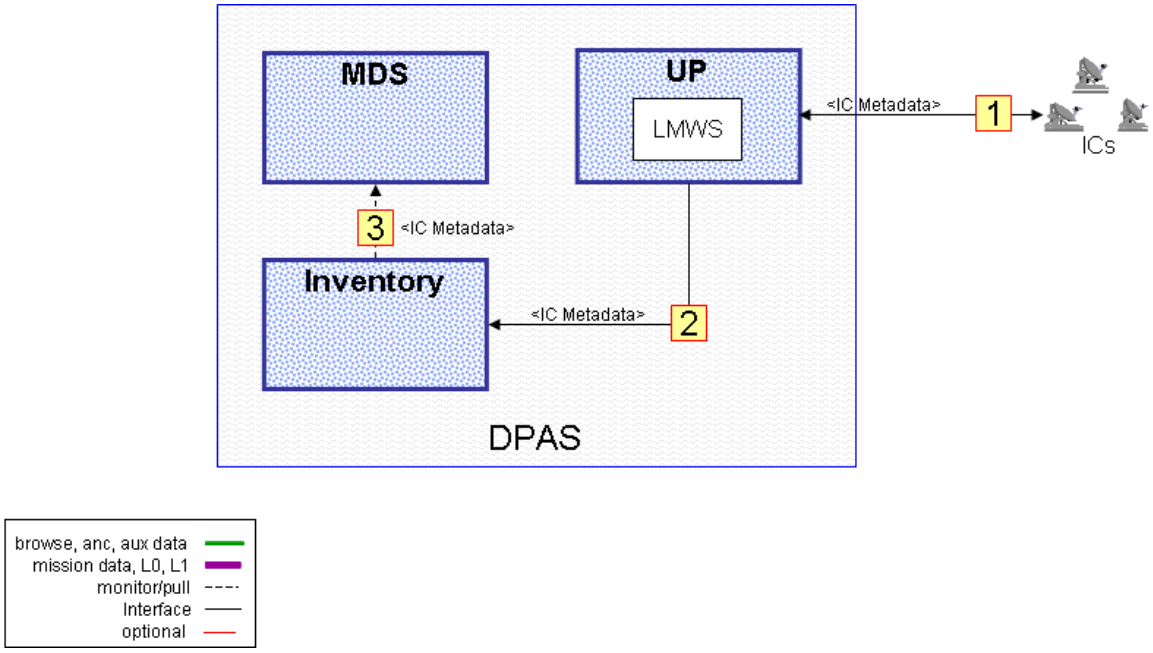

Figure 44 Metadata Ingest Subsystem

Step	Description
1	An IC is authenticated (via *5.7.1 Registration*), and provides scene metadata (path, row, acquisition data, receiving station id) to the UP Subsystem utilizing the Landsat Missions Web Site (LMWS).
2	The UP Subsystem loads the IC metadata into the Inventory Subsystem. Checks are performed by the UP Subsystem to ensure that the provided metadata is compliant with metadata standards. **Note:** The IC metadata is now available for searching, including references to IC systems for distribution.
3	The MDS pulls the IC metadata from the Inventory Subsystem for IC collection reconciliation (see *5.6.2 Collection Reconciliation*).

5.10 Anomaly Resolution

5.10.1 Ingest Subsystem Error Recovery

Recovery from errors in the *5.2.1 Ingest Subsystem Mission Data* scenario is focused on two strategies. The first is a quick recovery, utilizing operational procedures. These procedures include coordinating with system personnel and may include retransferring the Mission Data from the DCRS, or activating failover or other hardware depending on the error. The second strategy is more lengthy approach that simply archives a problem dataset for later examination and possible recovery.

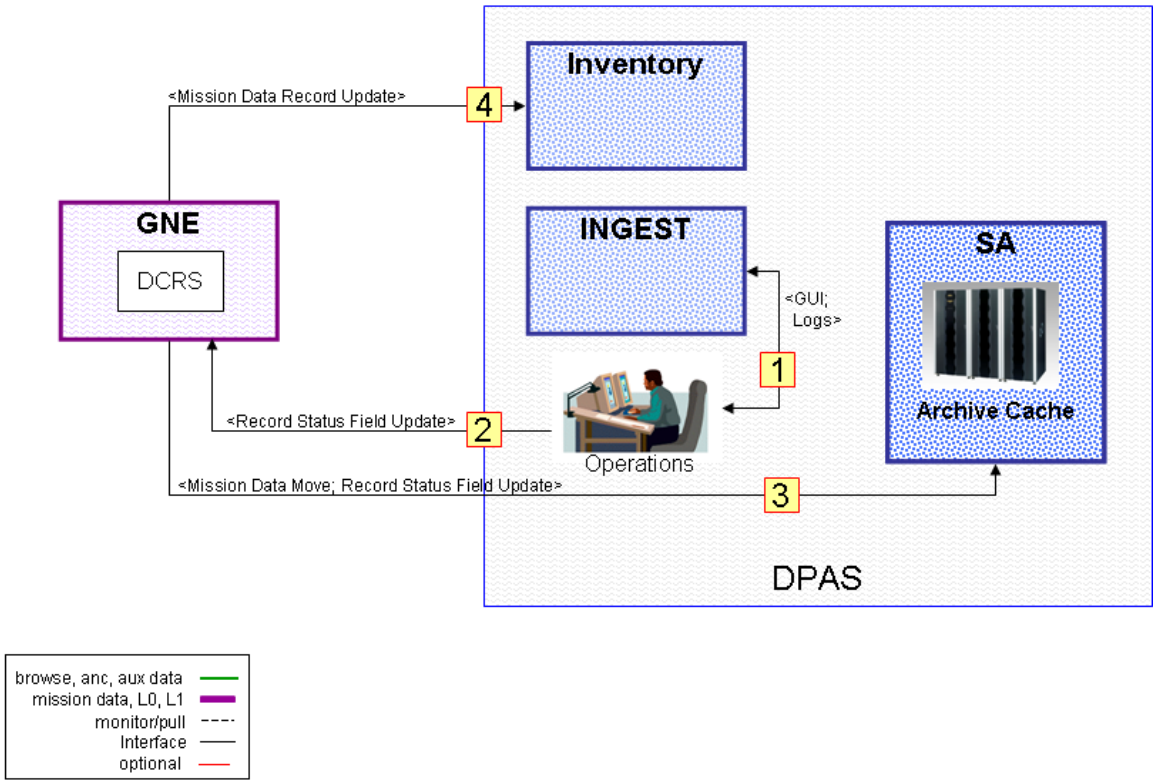

Figure 45 Ingest Subsystem Error Recovery

Step	Description
1	Operations monitors the Ingest Subsystem processing via the Ingest Subsystem processing GUI. When an error occurs, the GUI will reflect a bad status. Operations then follows established operational procedures to recover from a failure condition including the deployment of contingency operational hardware. These procedures may include contacting the GNE operator to retransfer the Mission Data to the Archive Cache. The procedures may also specify coordination with Operations, System Administrators, Database Administrators, Network Engineers, and Hardware Engineers as required.
2	The status field in GNE (DCRS) database is updated to indicate success or failure of an ingest, and the GNE monitors this field to determine when to move the Mission Data to

	the permanent archive directory of the Archive Cache of the Storage and Archive Subsystem (SA) Subsystem. If after retransmission of the Mission Data no resolution could be found to a processing error, Operations will update the status field in the GNE database to failure.
3	The GNE (DCRS) moves the Mission Data from the temporary directory of the Archive Cache to the permanent directory for data archival. Correspondingly, the GNE (DCRS) updates the GNE database to indicate completion of the ingest process.
4	The GNE (DCRS) updates the Inventory Subsystem for the Mission Data location and the fact that it failed to be ingested. At some later point, the problem data may be analyzed for possible problem resolution.

5.10.2 Product Generation Error Recovery

Recovery from errors in the *5.2.2 Standard Product Generation* scenario involves consulting operational logs, attempting to restart a L1 process, and finally, examination of an anomalous dataset by the Cal/Val Team (CVT) to determine why the failure occurred.

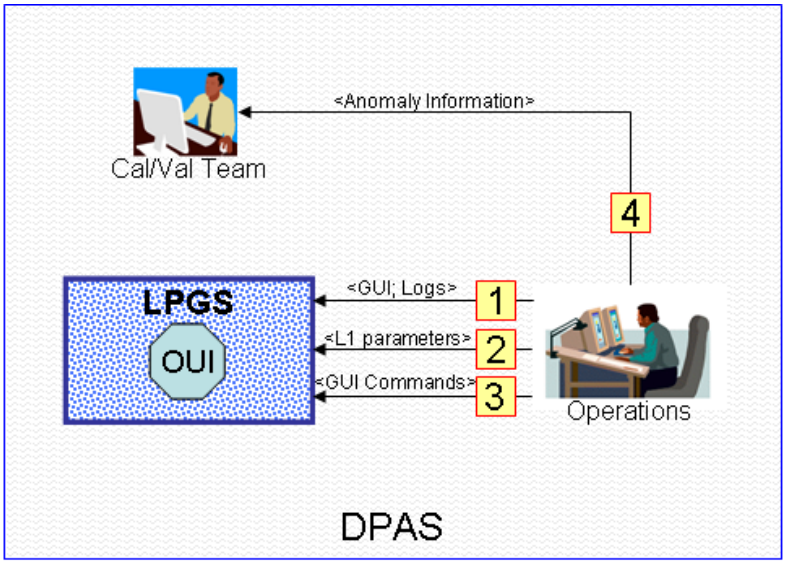

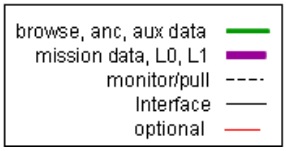

Figure 46 Product Generation Error Recovery

Step	Description
1	Operations monitor processing through the LPGS OUI for any errors. When any anomalies are found during L1 processing, the processing logs are examined for specific errors. When an error occurs, the OUI will reflect a bad status. Operations then follows established operational procedures to recover from a failure condition including the deployment of contingency operational hardware. The procedures may include contacting DPAS support personnel (System Administrators, Database Administrators, Network Engineers, Software Engineers, Systems Engineers, and Hardware Engineers) as required.
2	Operations consults their operational procedures, reviews the options specified in the L1 product request and L0Rp images, and attempts to identify the cause of the error.
3	Operations attempts to reprocess the L1 product.
4	If all the above steps fail to resolve the anomaly, it is reported to the Cal/Val Team (CVT) to investigate.

5.11 Continuity of Operations

5.11.1 Data Recovery

Data recovery for the DPAS is performed based on the severity of the data loss. In the event of a simple data or media loss, the LTA enterprise solution provides for the capability to restore said data from the (on-site) Backup Archive. In the event of a catastrophic loss, the (off-site) Deep Archive contained at the NARA facility is accessed as part of an overall disaster recovery plan. While not shown, the LTA also has operational staff to assist in recovery operations.

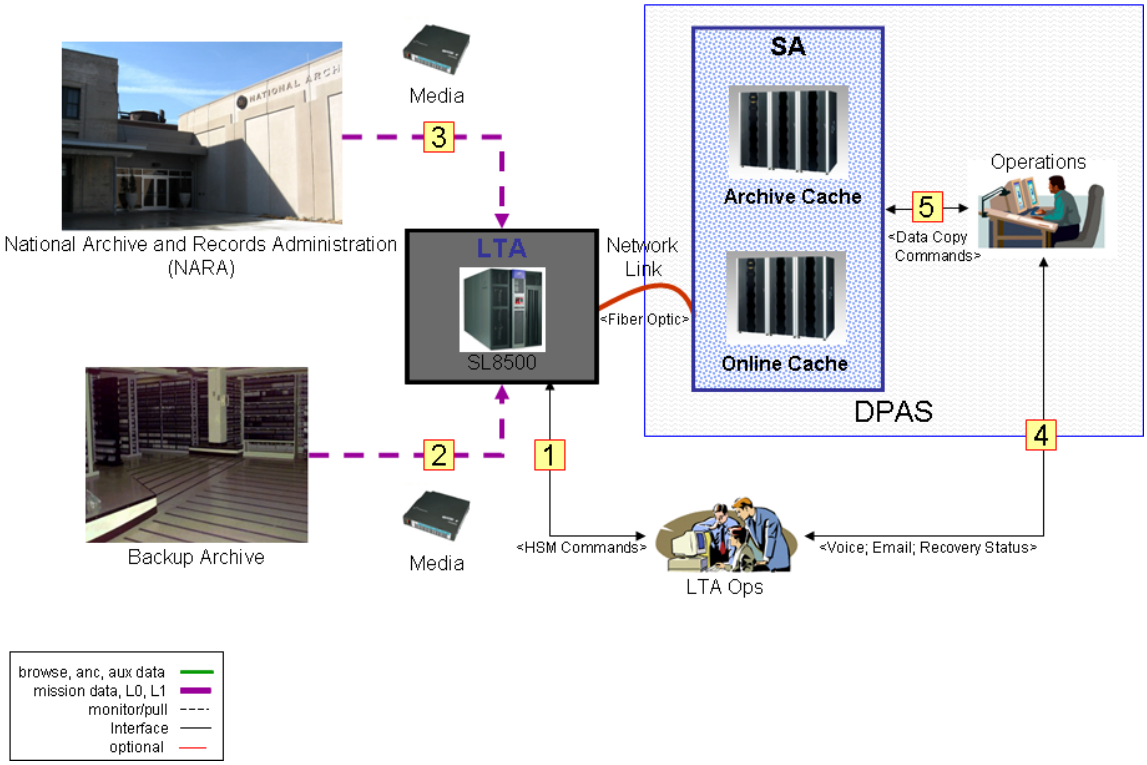

Figure 47 Data Recovery

Step	Description
1	LTA Operations staff identifies there is some data loss and recovery is needed. Part of this identification process is utilizing the media management capability (HSM) of the LTA SL8500 system to identify the problematic and on-site and offsite media.
2	LTA Operations staff accesses the (on-site) Backup Archive to recover the lost data.
3	If Step #2 fails (lost/bad media), LTA Operations staff accesses the Offsite Archive (NARA) to recover the lost data.
4	LTA Operations staff contacts DPAS Operations staff with recovery status.
5	If FRB and/or 8-bit QB data were recovered, then DPAS Operations copies the recovered data to the Online Cache, and notifies the Data Manager (DM) so that the Inventory Subsystem can be updated. If successful data recovery occurred, then nominal operations can resume. If unsuccessful, then Operations follows Ops procedures notifying appropriate personnel.

5.11.2 System Recovery

System recovery occurs after a failure of operational equipment or software. The DPAS is designed with fault tolerance in mind (i.e. multiple servers, high level Redundant Array of Inexpensive Disks (RAID), multiple copies of data) to guard against failures in order to meet operational availability and data loss requirements. In addition, most equipment today contains some form of fault prediction and/or detection capability as a standard configuration. In general, there are two types of failures that the DPAS must plan for: minor failures, which can be recovered from software restart, utilizing spares and maintenance contracts; and major failures, which require major purchases as a result of some catastrophic event. Major failures invoke the steps described in the LDCM Contingency Plan (LDCM-SEC-006).

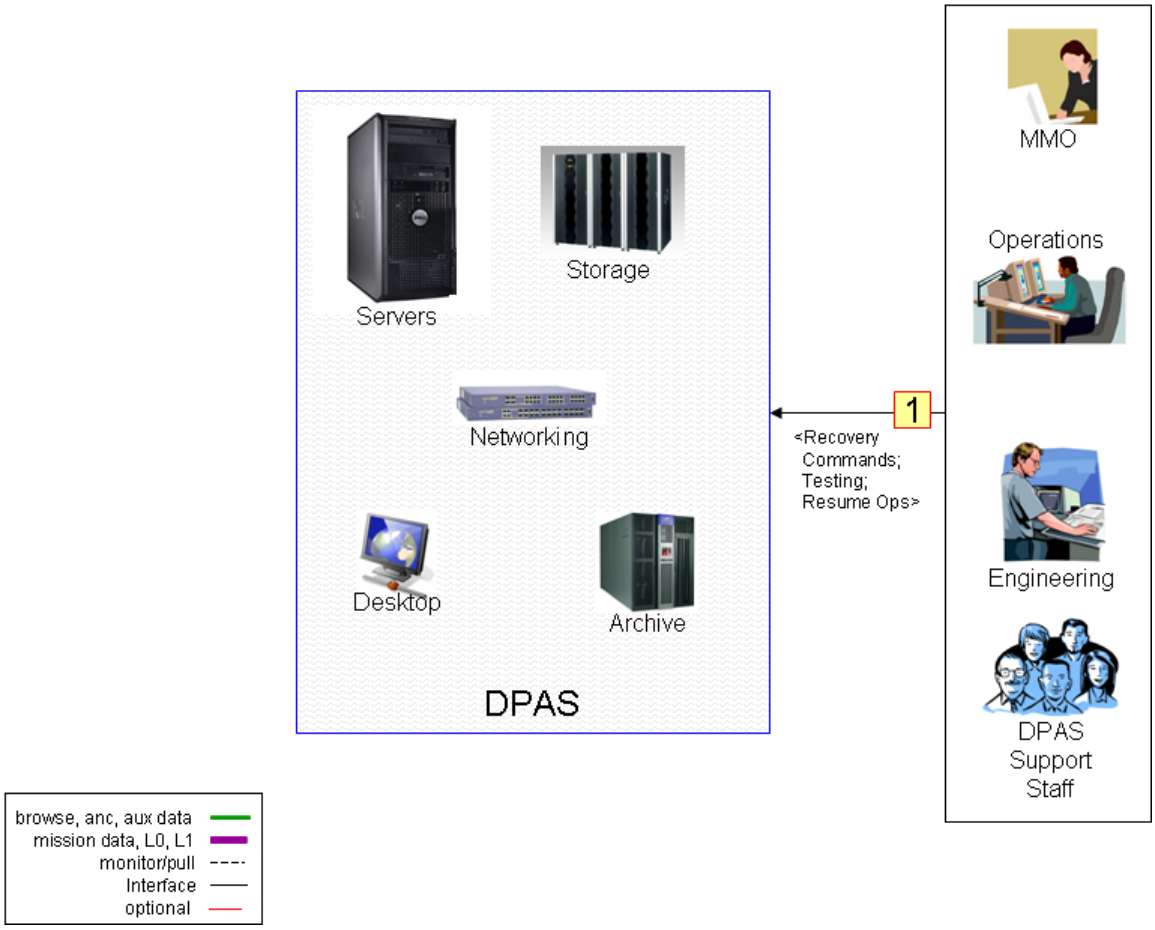

Figure 48 System Recovery

Step	Description
1	For **minor** failures, Operations identify the failure and follow an Operational Procedure. This is likely to involve hardware engineers as well as utilizing spare parts and maintenance contracts. In the event of software failure, Operations will consult their Operational Procedures, and notify appropriate operational personnel (systems engineers, software engineers, database developers, etc.) The engineers will fix the problem/reinstall software, execute tests, and resume nominal operations when able. **Note:** For most minor failures, the DPAS can operate in a reduced capacity. For **major** failures, Operations identify the extent of the failure(s) and in coordination with mission management, follow the steps described in the *LDCM Contingency Plan* (LDCM-SEC-006). According to the plan, replacement equipment is purchased, and the operational environment is recreated (operating systems, database systems, applications, etc.) For both minor and major failures, data recovery may be necessary (see *5.11.1 Data Recovery*), as well as product recovery (see *5.3 On-Demand Processing*). For major failures, a period of system testing will be performed. Nominal operations resumes when system recovery is complete.

5.11.3 Routine Backups

As part of standard DPAS operations, periodic automated backups are performed on each Subsystem. The DPAS will use the EROS enterprise backup solution, which includes the use of a local offsite backup facility for secure offsite storage.

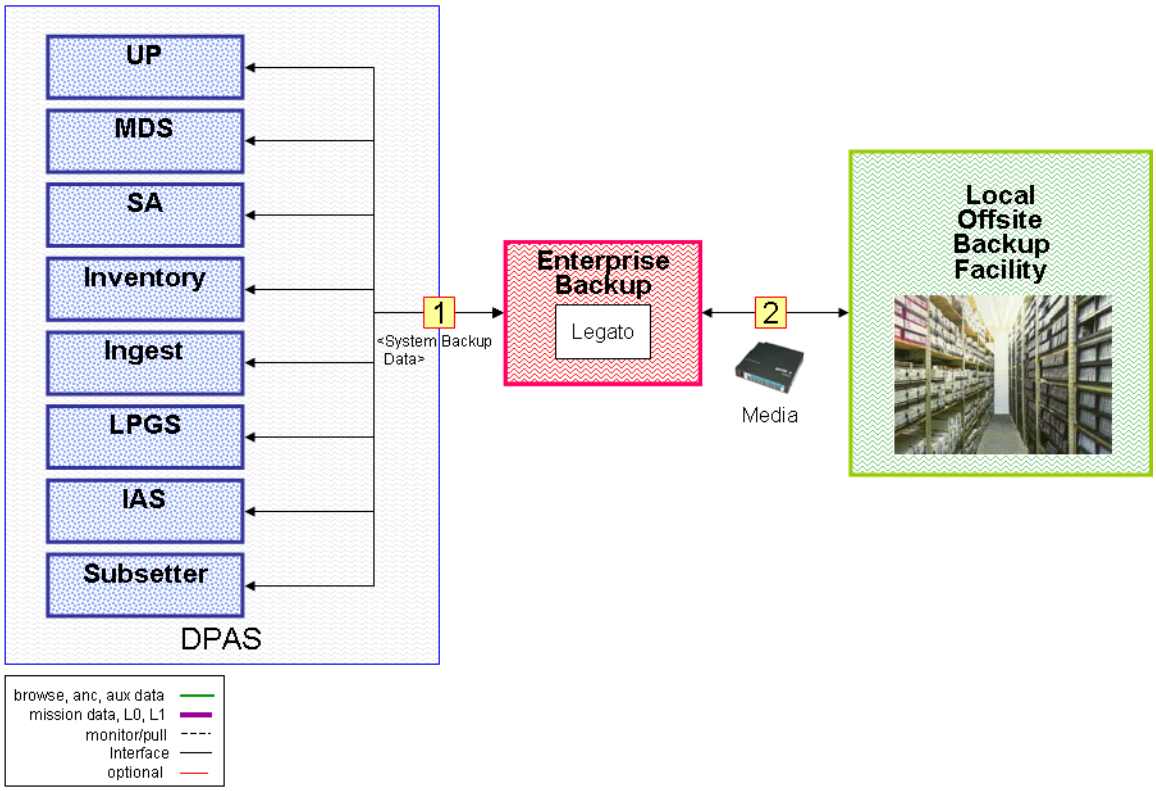

Figure 49 Routine Backups

Step	Description
1	Periodic automated backups are performed on the DPAS Subsystems, utilizing an enterprise backup system. Automated software on each Subsystem copies operational files to a centralized backup system. In the event of a data loss, the enterprise system is used for data recovery.
2	Periodically, media from the enterprise backup system (Legato) are delivered to the local offsite backup facility. Media are retrieved as needed from the offsite facility.

Appendix A Acronyms

Acronym	Expanded Definition
ADD	Algorithm Design Description
AOI	Area of Interest
BAD	Block Address Data
BPs	Bias Parameters
BPF	Bias Parameter File
Cal/Val	Calibration/Validation
CAPE	Collection Activity Planning Element
CCSDS	Consultative Committee for Space Data Systems
CFDP	CCSDS File Delivery Protocol
CM	Configuration Management
CPs	Calibration Parameters
CPF	Calibration Parameter File
CR #1	Computer Room One (EROS)
CVT	Cal/Val Team
CVTK	Cal/Val Toolkit
DCRS	Data Capture and Routing Subsystem
DEM	Digital Elevation Model
DFCB	Data Format Control Book
DM	Data Manager
DN	Digital Number
DPAS	Data Processing and Archive System
DPAS OCD	DPAS Operations Concept Document
DPAS RD	DPAS Requirements Document
DQA	Data Quality Analyst
DUI	Data (Manager) User Interface
DV&E	Data Validation & Exchange
EE	EarthExplorer
EROS	Earth Resources Observation and Science
ETL	Extract, Transform, Load
FOT	Flight Operations Team
FRB	Full Resolution Browse
GCP	Ground Control Point
GNE	Ground Network Element
GS	Ground System
GSFC	Goddard Space Flight Center
GS OCD	Ground System Operations Concept Document
GSRD	Ground System Requirements Document
GUI	Graphical User Interface

Acronym	Expanded Definition
HSM	Hierarchical Storage Management
I&T	Integration and Test
IAS	Image Assessment Subsystem
ICs	International Cooperators
IDF	Interval Definition File
IS	Ingest Subsystem
KML	Keyhole Markup Language
L0	Level 0
L0Ra	Level 0 Reformatted Archive
L0Rp	Level 0 Reformatted Product
L1	Level 1
L1Gt	Level 1 Geometric Systematic Terrain
L1R	Level 1 Radiometric Corrected
L1T	Level 1 Terrain Corrected
LDCM	Landsat Data Continuity Mission
LGN	Landsat Ground Network
LMD	LDCM Mission Database
LMWS	Landsat Mission Web Site
LPGS	Level 1 Product Generation Subsystem
LSS	Launch Services Segment
LTA	Long Term Archive
LUT	Look Up Table
MDS	MMO Database Subsystem
MMO	Mission Management Office
MOC	Mission Operations Center
MOE	Mission Operations Element
NARA	National Archive and Records Administration
NASA	National Aeronautics and Space Administration
NISN	NASA Integrated Services Network
NSLRSDA	National Satellite Land Remote Sensing Data Archive
OCD	Operations Concept Document
OGC	Open Geospatial Consortium
OUI	Operator User Interface
PROC	Procedure; a series of data movements and logic for database processing
QB	Quality Band (properly Quality Assessment Band)
RAID	Redundant Array of Inexpensive Disks
RLUT	Response Linearization Look Up Table
ROLO	RObotic Lunar Observatory
RRB	Reduced Resolution Browse
SA	Storage and Archive Subsystem
S/C	Spacecraft
SID	Searchable Inventory Subsystem Database

Acronym	Expanded Definition
SIFMT	Scene to Interval Mapping Table
SL8500	Storage Library model 8500
SLA	Service Level Agreement
SS	Space Segment
SMRD	Science Mission Requirements Document
SWIR	Short Wave Infrared
TRAM	Tracking, Routing, and Metrics
UP Subsystem	User Portal Subsystem
USC	United States Code
USGS	United States Geological Survey
USNO	United States Naval Observatory
UT1	Universal Time
UTC	Coordinate Universal Time
VAFB	Vandenberg Air Force Base
WRS	Worldwide Reference System
WSC	White Sands Complex

Appendix B Requirement to Scenario Trace

What follows is a requirement to scenario traceability matrix generated by the DOORS requirements management tool. A second table is provided at the bottom of the document that provides a cross reference between the scenario reference number and the scenario section ID in the DPAS OCD.

Req ID	Requirement Text	Scenario Ref
DPAS12	The DPAS shall use the Système International (SI) units for interfaces; the usage of any other unit(s) other than the SI shall be clearly communicated and documented.	3, 4, 6, 7, 21, 22
DPAS14	The DPAS shall use the Universal Time Coordinated (UTC) or a UTC-relatable time reference frame for ground operation commands and data products.	3, 4, 6, 7, 21, 22
DPAS392	The DPAS shall comply with NARA standards.	9
DPAS466	The DPAS user interfaces shall comply with section 508 of the Rehabilitation Act (29 U.S.C. 794d).	16, 17, 18, 19
DPAS469	The DPAS shall be compliant with OMB policy on privacy.	16, 17, 18, 19
DPAS470	The DPAS web-based interfaces shall comply with the U.S. Geological Survey 550.1-USGS Visual Identity System.	16, 17, 18, 19
DPAS104	The DPAS shall be consistent with the Landsat Metadata Definition Document (LMDD).	3, 4, 6, 7, 11, 13, 21, 22
DPAS938	The DPAS shall comply with the International Traffic in Arms Regulations (ITAR) as defined in the Code of Federal Regulations, Parts 120 through 130 (22 CFR 120-130) Subchapter M, Title 22.	37
DPAS49	The DPAS shall authenticate and authorize users.	37
DPAS50	The DPAS shall restrict access to log and tracking information to authorized users.	37
DPAS51	The DPAS shall restrict access of the processing control parameters to authorized users.	3, 4, 6, 7, 21, 24, 34, 35
DPAS52	The DPAS shall set restricted access on all operational files to authorized users.	37
DPAS53	The DPAS shall set restricted access on all directories to authorized users.	37
DPAS55	The DPAS shall protect all login and password information required for the validation of authorized users.	37
DPAS393	The DPAS shall protect sensitive information.	9, 10, 11, 16, 17, 18, 19
DPAS394	The DPAS shall generate and retain usage, access, and error information.	28, 29

DPAS468	The DPAS web-based interfaces shall use Transport Layer Security (TLS)/Secure Socket Layer (SSL) encryption for all sensitive user information and mobile code.	16, 17, 18, 19
DPAS802	The DPAS shall use LDAP to control user access and authorization.	37
DPAS805	The DPAS databases shall use Security roles to control user access.	37
DPAS806	The DPAS databases shall be capable of encrypting data.	4, 6, 16, 21, 22, 34, 35
DPAS397	The DPAS shall support at least 10 years of mission life.	37
DPAS18	The DPAS shall gnerate Level 1 products for all earth data within 24 hours of receipt of mission data from GNE, 90% of the time.	3, 4, 5
DPAS23	The DPAS shall generate at least 500 scene-equivalents of L0Ra data per day.	3
DPAS1224	The DPAS shall have the capability to expand to subset at least 1750 scenes per day in the third year after launch.	4, 6, 10
DPAS1223	The DPAS shall subset at least 975 scenes per day.	4, 6, 10
DPAS24	The DPAS shall have the capability to produce 550 L0Rp data products per day.	4
DPAS1225	The DPAS shall have the capability to expand to produce at least 600 L0Rp data products per day in the third year after launch.	4, 6, 10
DPAS25	The DPAS shall have the capability to produce 900 Level 1 data products per day.	4
DPAS1213	The DPAS shall generate at least 500 Full Resolution Browse (FRB) per day.	5, 9, 10
DPAS1212	The DPAS shall have the capability to expand to produce at least 1650 Level 1 data products per day in the third year after launch.	4, 6, 10
DPAS28	The DPAS shall generate at least 50 data products for Cal/Val per day (24 hours), subject to availability requirements.	21
DPAS409	The DPAS shall distribute at least 1250 L1 products per day.	16, 17
DPAS1217	The DPAS shall distribute at least 1250 (TBR) Quality Band (QB) files per day.	10, 11, 17
DPAS1215	The DPAS shall be have the capability to expand to distribute at least 3500 L1 products per day in the third year after launch.	10, 11, 17
DPAS505	The DPAS shall distribute at least 100 L0Rp products per day.	16, 17
DPAS1216	The DPAS shall distribute at least 1250 (TBR) Full Resolution Browse (FRB) files per day.	10, 11, 17
DPAS1214	The DPAS shall have the capability to expand to distribute up to 300 L0Rp products per day in the third year after launch.	10, 11, 17
DPAS133	The DPAS shall archive at least 99.8% of the data received from the GNE, measured on a quarterly basis.	3
DPAS34	The DPAS shall be available at least 95% of the time to search and order data products, measured on a quarterly basis.	33
DPAS1003	The DPAS shall be available at least 85% of the time for product generation and archive, measured on a quarterly basis.	33
DPAS450	The DPAS shall provide data to an Off-Site Archive to support recovery operations in the event of a disaster.	9, 31

DPAS1053	The DPAS shall perform planned data migration activities and technology upgrades within the stated performance and availability requirements.	9, 10, 33
DPAS727	The DPAS shall update the location of LDCM data in the inventory.	3, 4, 5, 6, 7, 9, 10
DPAS13	The DPAS shall be able to identify International Cooperator (IC) mission data and metadata from the LGN captured and processed mission data and metadata.	3, 7, 24, 26, 34, 35
DPAS9	The DPAS shall process imaging data taken anywhere in the orbit.	3, 4, 5, 6, 7, 21, 22
DPAS7	The DPAS shall have the capability to generate nadir and off-nadir products for Earth data.	3, 4, 5, 6, 7, 21, 22
DPAS728	The DPAS shall deliver mission data and processed data to shared storage.	3, 4, 5, 6, 7, 21
DPAS4	The DPAS shall provide systems management for all Subsystems.	37
DPAS5	The DPAS shall create, store, delete, and backup logs.	37
DPAS400	The DPAS shall provide the capability to perform data migration and technology upgrades.	33
DPAS26	The DPAS shall provide a capability for priority processing.	4, 6, 21
DPAS1222	The DPAS shall perform L1 processing according to a priority scheme: (1) Priority orders (oldest to newest), (2) Forward processing (new data) orders (oldest to newest), (3) On-demand orders (oldest to newest).	4, 6
DPAS1221	The DPAS shall provide the capability to concurrently process new and on-demand Cal/Val data products.	21
DPAS1220	The DPAS shall provide the capability to concurrently generate Level 1 products for new data and for on-demand product requests.	4, 6
DPAS1219	The DPAS shall provide the capability to concurrently subset new data, on-demand data, and reprocess old data.	4, 6
DPAS1218	The DPAS shall provide the capability to concurrently ingest new data and reprocess old data.	3, 7
DPAS78	The DPAS shall generate L0Ra data from mission data that includes both OLI and TIRS data.	3
DPAS1018	The DPAS shall generate L0Ra data from mission data that includes only OLI data.	3
DPAS1019	The DPAS shall generate L0Ra data from mission data that includes only TIRS data.	3
DPAS79	The DPAS shall apply calibration parameters for L0Ra processing of OLI data.	3, 7
DPAS1056	The DPAS shall apply calibration parameters for L0Ra processing of TIRS data.	3
DPAS82	The DPAS shall create entity metadata that is stored with the L0Ra data.	3
DPAS85	The DPAS shall correct ancillary data in the mission data, critical to processing, when creating the L0Ra data.	3
DPAS89	The DPAS shall nominally align the even and odd detector pixels in	3

	the OLI data in the interval using detector alignment values defined in the calibration parameters.	
DPAS83	The DPAS shall fill erroneous data lines found within an interval.	3
DPAS84	The DPAS shall identify where erroneous data lines within the L0 data were found and filled in the entity metadata.	3
DPAS38	The DPAS shall have the capability to process mission data to recreate L0Ra data.	3
DPAS80	The DPAS shall create L0Ra data in the HDF5 format.	3
DPAS81	The DPAS shall create L0Ra data in conformance with the L0 DFCB.	3
DPAS92	The DPAS shall store ancillary data for operational trending and analysis.	3, 21
DPAS93	The DPAS shall provide the option to characterize detector saturation in shutter, lamp, and solar diffuser data during L0Ra processing of OLI data, using the characterization algorithm defined in the Cal/Val Algorithm Description Document (ADD).	3, 21
DPAS1059	The DPAS shall provide the option to characterize detector saturation in blackbody and deep space data during L0Ra processing of TIRS data, using the characterization algorithm defined in the Cal/Val Algorithm Description Document (ADD).	3, 21
DPAS94	The DPAS shall provide the option to characterize impulse noise in shutter, lamp, and solar diffuser data during L0Ra processing of OLI data, using the characterization algorithm defined in the Cal/Val Algorithm Description Document (ADD).	3, 21
DPAS1060	The DPAS shall provide the option to characterize impulse noise in blackbody and deep space data during L0Ra processing of TIRS, using the characterization algorithm defined in the Cal/Val Algorithm Description Document (ADD).	3, 21
DPAS95	The DPAS shall generate detector histogram statistics for shutter data in OLI data, using the characterization algorithm defined in the Cal/Val Algorithm Description Document (ADD).	3
DPAS1061	The DPAS shall generate detector histogram statistics for blackbody and deep space data in TIRS data, using the characterization algorithm defined in the Cal/Val Algorithm Description Document (ADD).	3
DPAS96	The DPAS shall store the results of detector histogram statistics for operational trending.	3, 21
DPAS97	The DPAS shall store separate detector histogram statistics for each of the imaged data sources.	3, 21
DPAS98	The DPAS shall generate detector calibration bias parameter sets.	3
DPAS99	The DPAS shall save baseline calibration bias parameters.	3, 21
DPAS100	The DPAS shall uniquely identify calibration bias parameter sets.	3
DPAS101	The DPAS shall maintain an effective orbit, date range, and version for every calibration bias parameter set.	3
DPAS102	The DPAS shall maintain all versions of OLI baselined calibration bias parameter sets.	3

DPAS1039	The DPAS shall maintain all versions of TIRS baselined calibration bias parameter sets.	3
DPAS106	The DPAS shall store mission data metadata in the LDCM inventory.	3
DPAS107	The DPAS shall generate inventory interval metadata for every L0Ra data interval.	3
DPAS1073	The DPAS shall include an indicator of data acquired (OLI only, TIRS only, or OLI + TIRS) in the L0Ra interval metadata.	3, 7
DPAS108	The DPAS shall store L0Ra interval metadata in the LDCM inventory.	3
DPAS109	The DPAS shall generate inventory metadata for every full WRS-2 scene identified in a L0Ra interval.	3
DPAS110	The DPAS shall generate inventory metadata for every partial WRS-2 scene identified in a L0Ra interval.	3
DPAS1074	The DPAS shall include an indicator of data acquired (OLI only, TIRS only, or OLI + TIRS) in the L0Ra scene metadata.	3, 7
DPAS111	The DPAS shall store WRS-2 scene metadata in the LDCM inventory.	3
DPAS554	The DPAS shall allow authorized users to place Cal/Val orders.	21
DPAS64	The DPAS shall manage processing work flows.	3, 4, 21
DPAS65	The DPAS shall provide the capability to manage work orders.	3, 4, 21
DPAS66	The DPAS shall record processing events in log files to document errors, warnings, and status messages, and assist with problem investigation.	3, 4, 5, 6, 7, 21, 28, 29
DPAS69	The DPAS shall store parameters, defaults and valid ranges for process work flows.	3, 4, 5, 6, 7, 21
DPAS70	The DPAS shall be capable of distributing processing of work orders across multiple servers.	3, 4, 6, 7
DPAS114	The DPAS shall wait a maximum of 12 hours for bias parameters before L1 processing.	4
DPAS139	The DPAS shall extract a subset of the L0Ra interval divided in the along track direction.	4, 6, 21
DPAS1008	The DPAS shall generate L0Rp products from L0Ra data that includes both OLI and TIRS data, for full WRS-2 scenes.	4, 6, 21
DPAS1020	The DPAS shall generate L0Rp products from L0Ra data that includes only OLI data, for full WRS-2 scenes.	4, 6, 21
DPAS1021	The DPAS shall generate L0Rp products from L0Ra data that includes only TIRS bands, for full WRS-2 scenes.	4, 6, 21
DPAS138	The DPAS shall generate L0Rp WRS-2 scene based products in conformance with the L0Rp DFCB.	4, 6, 21
DPAS1070	The DPAS shall create L0Rp entity metadata that is stored with the L0Rp data.	4, 6
DPAS141	The DPAS shall apply calibration parameters to OLI data in the generation of Level 1 products.	4, 6, 21
DPAS1058	The DPAS shall apply calibration parameters to TIRS data in the generation of Level 1 products.	4, 6, 21

DPAS45	The DPAS shall have the capability to generate L1 products on demand.	6, 21
DPAS142	The DPAS shall by default produce signed 16-bit data products.	4, 6, 21
DPAS143	The DPAS shall provide the option to produce floating point data products.	4, 6, 21
DPAS144	The DPAS shall calculate the percentage of the scene which is covered with clouds for all sunlit Earth scenes.	4, 6
DPAS145	The DPAS shall generate entity metadata for every Level 1 product.	4, 6, 21
DPAS146	The DPAS shall generate Level 1 products in conformance with the Level 1 DFCB.	4, 6, 21
DPAS1009	The DPAS shall have the capability to generate L1T products from L0Rp data that includes both OLI and TIRS data.	4, 6, 21
DPAS1022	The DPAS shall have the capability to generate L1T products from L0Rp data that includes only OLI data.	4, 6, 21
DPAS1023	The DPAS shall have the capability to generate L1T products from L0Rp data that includes only TIRS data.	4, 6, 21
DPAS1011	The DPAS shall perform ground control and terrain correction (L1T) processing for all standard products.	4, 6, 21
DPAS1072	The DPAS shall create an L1G systematic terrain corrected product (L1GT) when control point matching is unsuccessful for standard product generation.	4, 6
DPAS1071	The DPAS shall automatically determine whether control point matching was successful for standard product generation.	4, 6
DPAS148	The DPAS shall create single-scene WRS-2 based products that include both OLI and TIRS data.	4, 6, 21
DPAS1035	The DPAS shall create single-scene WRS-2 based products from L0Ra data that includes only OLI data.	4, 6, 21
DPAS1036	The DPAS shall create single-scene WRS-2 based products from L0Ra data that includes only TIRS data.	4, 6, 21
DPAS147	The DPAS shall create single-scene WRS-2 scene equivalent products for off-nadir scenes.	4, 6, 21
DPAS150	The DPAS shall generate L1R Top of Atmosphere (TOA) reflectance data products by default.	4, 6, 21
DPAS151	The DPAS shall provide the option to generate L1R Top of Atmosphere (TOA) radiance data products.	4, 6, 21
DPAS152	The DPAS shall convert the image digital number (DN) values to scaled radiance using detector bias and responsivity models during radiometric correction processing.	4, 6, 21
DPAS153	The DPAS shall provide the capability to optionally apply detector gain corrections during radiometric correction processing.	4, 6, 21
DPAS154	The DPAS shall provide the capability to optionally apply detector gain temperature sensitivity corrections during radiometric correction processing.	4, 6, 21
DPAS156	The DPAS shall process lunar data to L1R products.	21
DPAS157	The DPAS shall process solar data to L1R products.	21
DPAS158	The DPAS shall process night data to L1R products.	21

DPAS159	The DPAS shall process OLI shutter data to L1R products.	21
DPAS160	The DPAS shall process OLI lamp data to L1R products.	21
DPAS161	The DPAS shall process 90 degree yaw data to L1R products.	21
DPAS1014	The DPAS shall process TIRS blackbody data to L1R products.	21
DPAS1015	The DPAS shall process TIRS spaceview data to L1R products.	21
DPAS162	The DPAS shall process earth data to L1R products.	4, 6, 21
DPAS164	The DPAS shall generate detector histogram statistics from the image data in the L0Rp files, using the characterization algorithm defined in the Cal/Val Algorithm Description Document (ADD).	4, 6, 21
DPAS165	The DPAS shall generate per-frame statistics in the SCA overlap areas, using the characterization algorithm defined in the Cal/Val Algorithm Description Document (ADD).	4, 6, 21
DPAS166	The DPAS shall store the results of the detector histogram statistics for operational trending.	4, 6, 21
DPAS167	The DPAS shall store separate detector histogram statistics for each of the imaged data sources.	4, 6, 21
DPAS168	The DPAS shall provide the option to characterize detector saturation during L1R processing, using the characterization algorithm defined in the Cal/Val Algorithm Description Document (ADD).	4, 6, 21
DPAS169	The DPAS shall provide the option to characterize impulse noise during L1R processing, using the characterization algorithm defined in the Cal/Val Algorithm Description Document (ADD).	21
DPAS172	The DPAS shall provide the option to store the results of the characterizations for operational trending.	4, 6, 21
DPAS173	The DPAS shall provide the option to output the results of the characterizations in a report, used to determine calibration parameters and to evaluate the instrument and product performance.	4, 6, 21
DPAS170	The DPAS shall provide the option to characterize the striping ratio per Sensor Chip Assembly (SCA), using the characterization algorithm defined in the Cal/Val Algorithm Description Document (ADD).	4, 6, 21
DPAS175	The DPAS shall correct detectors for temperature sensitivity, using the correction algorithm defined in the Cal/Val Algorithm Description Document (ADD).	4, 6, 21
DPAS176	The DPAS shall correct for banding in the OLI data, using the correction algorithm defined in the Cal/Val Algorithm Description Document (ADD).	4, 6, 21
DPAS1040	The DPAS shall correct for banding in the TIRS data, using the correction algorithm defined in the Cal/Val Algorithm Description Document (ADD).	4, 6, 21
DPAS177	The DPAS shall provide the option to correct for inoperable or out-of-specification OLI detectors identified in the calibration parameters, using the correction algorithm defined in the Cal/Val Algorithm Description Document (ADD).	4, 6, 21
DPAS1041	The DPAS shall provide the option to correct for inoperable or out-	4, 6, 21

	of-specification TIRS detectors identified in the calibration parameters, using the correction algorithm defined in the Cal/Val Algorithm Description Document (ADD).	
DPAS178	The DPAS shall correct for radiometric striping in OLI data during L1R processing, using the correction algorithm defined in the Cal/Val Algorithm Description Document (ADD).	4, 6, 21
DPAS1042	The DPAS shall correct for radiometric striping in TIRS data during L1R processing, using the correction algorithm defined in the Cal/Val Algorithm Description Document (ADD).	4, 6, 21
DPAS179	The DPAS shall provide the option to correct saturated pixels in the OLI imagery, using the correction algorithm defined in the Cal/Val Algorithm Description Document (ADD).	4, 6, 21
DPAS1044	The DPAS shall provide the option to correct saturated pixels in the TIRS imagery, using the correction algorithm defined in the Cal/Val Algorithm Description Document (ADD).	4, 6, 21
DPAS180	The DPAS shall provide the option to correct for nonlinear detector response, using the correction algorithm defined in the Cal/Val Algorithm Description Document (ADD).	4, 6, 21
DPAS181	The DPAS shall apply band offset and scale factors, from the calibration parameters, to the OLI L1R radiance data to obtain signed 16-bit calibrated DNs, using the algorithm defined in the Cal/Val Algorithm Description Document (ADD).	4, 6, 21
DPAS1045	The DPAS shall apply band offset and scale factors, from the calibration parameters, to the TIRS L1R radiance data to obtain signed 16-bit calibrated DNs, using the algorithm defined in the Cal/Val Algorithm Description Document (ADD).	4, 6, 21
DPAS184	The DPAS shall contribute no greater than 0.7 percent uncertainty to absolute radiometric accuracy during the generation of OLI data products at the 90% confidence level (1 sigma).	4, 6, 21
DPAS1017	The DPAS shall contribute no greater than 0.7 percent uncertainty to absolute radiometric accuracy during the generation of TIRS data products at the 90% confidence level (1 sigma).	4, 6, 21
DPAS187	The DPAS shall create OLI lunar L1G products.	21
DPAS189	The DPAS shall create L1G products from L1R corrected products.	4, 6, 21
DPAS87	The DPAS shall align the SCA data in the interval using SCA alignment values defined in the calibration parameters.	4, 6, 21
DPAS88	The DPAS shall align the bands in the interval using band alignment values defined in the calibration parameters.	4, 6, 21
DPAS190	The DPAS shall combine SCA data to produce a single full width L1G scene by default.	4, 6, 21
DPAS191	The DPAS shall provide the option to create L1G products without combined SCA data.	21
DPAS192	The DPAS shall have the capability to optionally create intermediate L1G products.	4, 6, 21
DPAS193	The DPAS shall have the capability to optionally create intermediate L1G systematic terrain (L1Gt) data products.	4, 6, 21

DPAS194	The DPAS shall apply attitude and ephemeris data extracted from the Level 0 ancillary data during Level 1 product generation.	4, 6, 21
DPAS195	The DPAS shall perform pre-processing of OLI ancillary data as defined in the Cal/Val Algorithm Description Document (ADD).	4, 6, 21
DPAS1027	The DPAS shall perform pre-processing of TIRS ancillary data as defined in the Cal/Val Algorithm Description Document (ADD).	4, 6, 21
DPAS1013	The DPAS shall apply TIRS ancillary data calibration corrections on the ancillary data, using the algorithm defined in the Cal/Val Algorithm Description Document (ADD).	4, 6, 21
DPAS200	The DPAS shall implement an OLI line-of-sight (LOS) model creation algorithm, using the algorithm defined in the Cal/Val Algorithm Description Document (ADD).	4, 6, 21
DPAS1012	The DPAS shall implement a TIRS line-of-sight (LOS) model creation algorithm, using the algorithm defined in the Cal/Val Algorithm Description Document (ADD).	4, 6, 21
DPAS201	The DPAS shall implement an OLI line-of-sight projection algorithm, using the algorithm defined in the Cal/Val Algorithm Description Document (ADD).	4, 6, 21
DPAS1032	The DPAS shall implement a TIRS line-of-sight projection algorithm, using the algorithm defined in the Cal/Val Algorithm Description Document (ADD).	4, 6, 21
DPAS202	The DPAS shall implement an OLI line-of-sight correction algorithm, using the algorithm defined in the Cal/Val Algorithm Description Document (ADD).	4, 6, 21
DPAS1033	The DPAS shall implement a TIRS line-of-sight correction algorithm, using the algorithm defined in the Cal/Val Algorithm Description Document (ADD).	4, 6, 21
DPAS203	The DPAS shall implement an OLI image resampling algorithm which interpolates values for Earth-referenced sample points from the L1R imagery, using the algorithm defined in the Cal/Val Algorithm Description Document (ADD).	4, 6, 21
DPAS1034	The DPAS shall implement a TIRS image resampling algorithm which interpolates values for Earth-referenced sample points from the L1R imagery, using the algorithm defined in the Cal/Val Algorithm Description Document (ADD).	4, 6, 21
DPAS206	The DPAS shall combine the inertial reference unit (IRU) data with the spacecraft attitude estimates, using the algorithm defined in the Cal/Val Algorithm Description Document (ADD).	4, 6, 21
DPAS208	The DPAS shall utilize GCPs to produce precision corrected L1G products, using the algorithm defined in the Cal/Val Algorithm Description Document (ADD).	4, 6, 21
DPAS209	The DPAS shall create a pixel-level image mask, also called a quality band (QB), that identifies the classification of each pixel for all sunlit Earth scenes, using the algorithm defined in the Science Algorithm Description Document (ADD).	4, 6
DPAS211	The DPAS shall provide a capability to produce L1G products with	4, 6, 21

	any pixel size between 10 meters and 120 meters in 0.01 meter increments.	
DPAS212	The DPAS shall create L1G products with a pixel size of 30 meters for the SWIR, VNIR, and thermal bands by default.	4, 6, 21
DPAS213	The DPAS shall create L1G products with a pixel size of 15 meters for the panchromatic band by default.	4, 6, 21
DPAS214	The DPAS shall produce L1G products with a pixel size that is independently variable between multi-spectral, panchromatic, and thermal bands.	4, 6, 21
DPAS216	The DPAS shall produce map north up oriented Level 1 products by default.	4, 6, 21
DPAS217	The DPAS shall provide the option to produce path oriented Level 1 products.	21
DPAS219	The DPAS shall produce products using the Universal Transverse Mercator (UTM) map projection by default.	4, 6, 21
DPAS220	The DPAS shall provide the option to produce products using the Polar Stereographic (PS) map projection.	4, 6, 21
DPAS221	The DPAS shall provide the option to produce products using the Space Oblique Mercator (SOM) map projection.	21
DPAS222	The DPAS shall produce products using the World Geodetic System of 1984 (WGS84) datum, G1150 or current version.	4, 6, 21
DPAS224	The DPAS shall allow the framing of the output image space from a specification using the extents of the data in the input image data to determine a minimum bounding rectangle in output space needed to create a WRS-2 sized output image by default.	4, 6, 21
DPAS225	The DPAS shall allow framing of the output image space from a specification using the upper-left and lower-right geographic (latitude/longitude) corner coordinates to determine a minimum bounding rectangle in output space.	4, 6, 21
DPAS226	The DPAS shall allow framing of the output image space from a specification using the upper-left and lower-right projection corner coordinates.	4, 6
DPAS227	The DPAS shall allow the framing of the output image space from a specification using the upper-left projection coordinate, output image pixel size, and the number of lines and samples in the output image.	4, 6, 21
DPAS229	The DPAS shall create L1G products using the cubic convolution resampling method for OLI data by default.	4, 6, 21
DPAS1048	The DPAS shall create L1G products using the cubic convolution resampling method for TIRS data by default.	4, 6, 21
DPAS230	The DPAS shall provide the option to create L1G products using the nearest neighbor resampling method.	21
DPAS233	The DPAS shall characterize the geodetic accuracy of L1T products, using the characterization algorithm defined in the Cal/Val Algorithm Description Document (ADD).	4, 6, 21
DPAS234	The DPAS shall characterize the geometric accuracy of L1T	4, 6, 21

	products, using the characterization algorithm defined in the Cal/Val Algorithm Description Document (ADD).	
DPAS235	The DPAS shall provide the option to store the results of the characterizations for operational trending.	4, 6, 21
DPAS237	The DPAS shall subset the DEM.	4, 6, 21
DPAS238	The DPAS shall reproject the DEM data to match the output projection of the L1G product.	4, 6, 21
DPAS239	The DPAS shall use the bi-linear resampling method when projecting the DEM data	4, 6, 21
DPAS824	The DPAS shall store GCP metadata and chips.	21
DPAS241	The DPAS shall retrieve GCP chips within a region of interest.	4, 6, 21
DPAS242	The DPAS shall reproject the GCP chips to match the output projection of the L1G product.	4, 6, 21
DPAS244	The DPAS shall automatically validate the geodetic accuracy of L1T products.	4, 6
DPAS245	The DPAS processing shall introduce across track band-to-band errors no greater than 0.5 micro-radians at 1 sigma (0.4 m, 1 sigma).	4, 6
DPAS246	The DPAS processing shall introduce along track band-to-band errors no greater than 0.71 micro-radians at 1 sigma (0.5 m, 1 sigma).	4, 6
DPAS247	The DPAS processing shall introduce across track geometric errors no greater than 2.69 micro-radians at 1 sigma (1.9 m, 1 sigma).	4, 6, 21
DPAS248	The DPAS processing shall introduce along track geometric errors no greater than 2.28 micro-radians at 1 sigma (1.6 m, 1 sigma).	4, 6, 21
DPAS261	The DPAS shall create L0Rp data products in HDF5 format.	4, 6, 21
DPAS262	The DPAS shall create L1R data products in HDF5 format.	4, 6, 21
DPAS263	The DPAS shall create L1G data products in HDF5 format.	4, 6, 21
DPAS264	The DPAS shall create standard L1 data products in GeoTIFF format.	4, 6
DPAS472	The DPAS shall display and export metadata search results in Federal Geographic Data Committee (FGDC) or International Standards Organization (ISO) 19115 formats.	17
DPAS251	The DPAS shall create LMDD-compliant product metadata for each Level 1 product generated.	4, 6
DPAS252	The DPAS shall create LMDD-compliant entity metadata for each L0Rp generated.	4, 6
DPAS253	The DPAS shall store the product metadata in the inventory.	4, 6
DPAS254	The DPAS shall store the cloud cover scores for the sunlit Earth scenes in the inventory.	4, 6
DPAS255	The DPAS shall include the scene cloud cover score in the entity metadata.	4, 6
DPAS256	The DPAS shall identify off-nadir scenes in the inventory metadata.	4, 6
DPAS257	The DPAS shall identify off-nadir scenes in the product entity metadata.	4, 6
DPAS1046	The DPAS shall include an indicator of data acquired (OLI only,	4, 6

	TIRS only, or OLI + TIRS) in the inventory metadata.	
DPAS1047	The DPAS shall include an indicator of bands acquired in the product entity metadata.	4, 6
DPAS258	The DPAS shall include information in the product inventory that represents the geodetic accuracy of the product.	4, 6
DPAS259	The DPAS shall include information in the product entity metadata that represents the geodetic accuracy of the product.	4, 6
DPAS267	The DPAS shall characterize the detector response of solar diffuser collects as defined in the Cal/Val Algorithm Description Document (ADD).	21
DPAS268	The DPAS shall characterize the OLI 60-second radiometric stability, using the characterization algorithm defined in the Cal/Val Algorithm Description Document (ADD).	4, 6, 21
DPAS1067	The DPAS shall characterize the TIRS radiometric stability, using the characterization algorithm defined in the Cal/Val Algorithm Description Document (ADD).	4, 6, 21, 22
DPAS269	The DPAS shall characterize the irradiance of the lunar calibration data, using the characterization algorithm defined in the Cal/Val Algorithm Description Document (ADD).	4, 6, 21
DPAS270	The DPAS shall generate a calculated lunar irradiance report for exchange with ROLO, as described on the Spacecraft Calibration page of the ROLO web site, http://www.moon-cal.org/spacecraft/overview.php	21
DPAS271	The DPAS shall ingest measured lunar irradiance reports for operational trending.	21
DPAS272	The DPAS shall characterize the OLI lamp data, using the characterization algorithm defined in the Cal/Val Algorithm Description Document (ADD).	4, 6, 21
DPAS1066	The DPAS shall characterize the TIRS deep space data, using the characterization algorithm defined in the Cal/Val Algorithm Description Document (ADD).	4, 6, 21, 22
DPAS1065	The DPAS shall characterize the TIRS blackbody data, using the characterization algorithm defined in the Cal/Val Algorithm Description Document (ADD).	4, 6, 21, 22
DPAS273	The DPAS shall characterize active detectors operability status per calibration collect, using the characterization algorithm defined in the Cal/Val Algorithm Description Document (ADD).	4, 6, 21
DPAS274	The DPAS shall characterize active detectors signal-to-noise ratio as a function of radiance per calibration collect, using the characterization algorithm defined in the Cal/Val Algorithm Description Document (ADD).	4, 6, 21
DPAS276	The DPAS shall characterize the response linearity of the active detectors, using the characterization algorithm defined in the Cal/Val Algorithm Description Document (ADD).	4, 6, 21
DPAS277	The DPAS shall characterize radiometric uniformity, using the characterization algorithm defined in the Cal/Val Algorithm	4, 6, 21

	Description Document (ADD).	
DPAS279	The DPAS shall determine the relative gains for all active detectors, using the algorithm defined in the Cal/Val Algorithm Description Document (ADD).	21
DPAS280	The DPAS shall determine the overall operability status for each of the active detectors, using the algorithm defined in the Cal/Val Algorithm Description Document (ADD).	21
DPAS281	The DPAS shall determine an overall SNR for each of the active detectors, using the algorithm defined in the Cal/Val Algorithm Description Document (ADD).	21
DPAS282	The DPAS shall derive bias model parameters for each OLI detector, using the algorithm defined in the Cal/Val Algorithm Description Document (ADD).	21
DPAS1068	The DPAS shall derive bias model parameters for each TIRS detector, using the algorithm defined in the Cal/Val Algorithm Description Document (ADD).	22
DPAS284	The DPAS shall characterize the band-to-band geometric alignment between bands, using the characterization algorithm defined in the Cal/Val Algorithm Description Document (ADD).	21
DPAS285	The DPAS shall characterize image-to-image registration stability/repeatability, using the characterization algorithm defined in the Cal/Val Algorithm Description Document (ADD).	21
DPAS286	The DPAS shall characterize the Modulation Transfer Function (MTF) for the instrument, using the characterization algorithm defined in the Cal/Val Algorithm Description Document (ADD).	21
DPAS288	The DPAS shall calculate the focal plane alignment corrections for band location and orientation, using the algorithm defined in the Cal/Val Algorithm Description Document (ADD).	21
DPAS289	The DPAS shall calculate the sensor alignment corrections between the OLI instrument and spacecraft, using the algorithm defined in the Cal/Val Algorithm Description Document (ADD).	21
DPAS1069	The DPAS shall calculate the sensor alignment corrections between the OLI instrument and the TIRS instrument, using the algorithm defined in the Cal/Val Algorithm Description Document (ADD).	22
DPAS290	The DPAS shall calculate the within SCA band alignment corrections for band to band registration, using the algorithm defined in the Cal/Val Algorithm Description Document (ADD).	21
DPAS292	The DPAS shall provide the option to store the results of the characterizations for operational trending.	4, 6, 21
DPAS293	The DPAS shall provide the option to store the results of the characterizations for operational trending.	21
DPAS294	The DPAS shall provide the option to output the results of the characterizations in a report.	21
DPAS295	The DPAS shall store test characterization data separate from production characterization data.	4, 21
DPAS297	The DPAS shall allow authorized Cal/Val users to derive calibration	21

	parameters on-command throughout mission life.	
DPAS298	The DPAS shall provide a Calibration Parameter GUI to manually edit/update/create test calibration parameters.	21
DPAS299	The DPAS shall provide a Calibration Parameter GUI to compare calibration parameter sets.	21
DPAS300	The DPAS shall automatically create test calibration parameter sets from the calibration subsets generated by the radiometric and geometric evaluation algorithms.	21
DPAS301	The DPAS shall provide a utility to merge a subset of calibration parameters with an existing set of calibration parameters to create a new set of calibration parameters.	21
DPAS302	The DPAS shall provide a utility to save a baseline set of calibration parameters.	21
DPAS303	The DPAS shall restrict the saving of baseline calibration parameter sets to authorized Cal/Val user(s).	21
DPAS304	The DPAS shall maintain all versions of baselined calibration parameter sets.	21
DPAS305	The DPAS shall uniquely identify calibration parameter sets.	21
DPAS306	The DPAS shall uniquely identify calibration parameter subsets.	21
DPAS307	The DPAS shall maintain an effective date range and version for every calibration parameter set.	21
DPAS308	The DPAS shall create updated retrospective versions of baselined calibration parameter sets.	21
DPAS309	The DPAS shall split an existing baseline set of calibration parameters for an effective date range into two new baseline sets of calibration parameters.	21
DPAS310	The DPAS shall provide a service to create a calibration parameter file from any version of a baseline calibration parameter set	21
DPAS311	The DPAS shall create calibration parameter files in conformance with the CPF DFCB.	21
DPAS312	The DPAS shall provide a service to create a calibration bias parameter file (BPF) from any version of a baseline calibration bias set.	21
DPAS313	The DPAS shall create calibration bias parameter file (BPF) in conformance with the BPF DFCB.	21
DPAS315	The DPAS shall provide the capability to test calibration parameter sets before they are released to the user community.	21
DPAS316	The DPAS shall automatically generate order requests to process scenes using reference and test calibration parameter sets.	21
DPAS317	The DPAS shall generate testing comparison reports from the results of calibration parameter set testing.	21
DPAS318	The DPAS shall provide a calibration parameter testing GUI with an option to initiate calibration parameter set testing	21
DPAS319	The DPAS shall provide a calibration parameter testing GUI to display calibration parameter set testing order completion notifications	21

DPAS320	The DPAS shall provide a calibration parameter testing GUI with an option to display the calibration parameters set testing results.	21
DPAS322	The DPAS shall report the overall band-to-band co-registration accuracy of L1T data products.	21
DPAS323	The DPAS shall report the overall image-to-image co-registration accuracy of L1T data products.	21
DPAS324	The DPAS shall report the overall geodetic accuracy of L1T products.	21
DPAS325	The DPAS shall report the overall geometric accuracy of L1T products.	21
DPAS327	The DPAS shall provide the option to combine L1R SCA data into a full width L1R image.	21
DPAS328	The DPAS shall provide a method to store vicarious calibration data.	21
DPAS329	The DPAS shall provide a method to store mission related events for operational trending.	21
DPAS405	The DPAS shall provide online storage for FRB for all products for the life of the mission.	5, 6
DPAS406	The DPAS shall provide online storage for QB for all products for the life of the mission.	4, 6
DPAS407	The DPAS shall provide online storage for at least 146,000 standard L1 products.	4, 6
DPAS729	The DPAS shall provide a method to remove processed data from shared storage.	10
DPAS408	The DPAS shall provide online storage for at least 36,500 L0Rp products.	4, 6
DPAS410	The DPAS shall provide a configurable file management capability.	10
DPAS411	The DPAS shall provide file status updates to the Inventory Subsystem when files are added or removed.	10
DPAS413	The DPAS shall provide shared disk storage for global DEM data.	4, 6
DPAS414	The DPAS shall provide disk storage for at least 1200 Cal/Val products.	21
DPAS415	The DPAS shall be capable of performing at least 925 L0Ra interval retrievals per day from shared disk storage.	4, 6, 21
DPAS135	The DPAS shall store all generated L0Ra data.	3, 7
DPAS417	The DPAS shall provide disk storage for at least 400 L0Ra scene-equivalents per day.	3
DPAS420	The DPAS shall provide a retrieval capability for archived data.	7, 9, 31
DPAS422	The DPAS shall provide a capability for operational monitoring of the archive.	9
DPAS423	The DPAS shall create and maintain information about media used, for media management and troubleshooting.	9
DPAS424	The DPAS shall provide a capability to retrieve media tracking information.	9
DPAS426	The DPAS shall provide archive management tools.	9
DPAS1050	The DPAS shall archive all mission data acquired.	3

DPAS433	The DPAS shall have the capability to archive at least 400 scene-equivalents of mission data per day.	3
DPAS437	The DPAS shall archive all full resolution browse (FRB) files generated.	5, 6
DPAS436	The DPAS shall archive all quality band (QB) files generated.	4, 6
DPAS431	The DPAS shall archive algorithms and system documentation.	9
DPAS435	The DPAS shall archive all pre-launch data acquired.	9
DPAS428	The DPAS shall archive all Block Address Data (BAD) acquired.	3
DPAS794	The DPAS shall create backup and archive routines for databases.	9, 33
DPAS434	The DPAS shall archive Milestone Backups of operational Ground Systems, including operating systems, inventories, metadata, COTS packages, software source, executables, and configuration files.	9
DPAS438	The DPAS shall provide the capability to export the holdings of the Operational Archive.	9
DPAS446	The DPAS shall maintain a copy of all mission data acquired in an on-site backup.	9
DPAS441	The DPAS shall maintain a copy of algorithms and system documentation in an on-site backup.	9
DPAS442	The DPAS shall maintain a copy of all pre-launch data acquired in an on-site backup.	9
DPAS443	The DPAS shall maintain a copy of all full resolution browse (FRB) files in an on-site backup.	9
DPAS445	The DPAS shall maintain a copy of all quality band (QB) files in an on-site backup.	9
DPAS440	The DPAS shall archive Milestone Backups of operational Ground Systems, including operating systems, inventories, metadata, COTS packages, software source, executables, and configuration files in an on-site backup archive.	9
DPAS448	The DPAS shall provide a capability to retrieve archived data from the off-site archive.	9
DPAS449	The DPAS off-site archive shall be geographically separated from the primary site.	9
DPAS451	The DPAS shall send algorithms and system documentation to an off-site archive.	9
DPAS452	The DPAS shall send all pre-launch data acquired to an off-site archive.	9
DPAS456	The DPAS shall send all full resolution browse (FRB) files to an off-site archive.	9
DPAS457	The DPAS shall send all quality band (QB) files to an off-site archive.	9
DPAS453	The DPAS shall archive Milestone Backups of all GS systems, including operating systems, inventories, metadata, COTS packages, software source, executables, and configuration files in an off-site backup archive.	9
DPAS458	The DPAS shall ensure the transport of archive data from the primary archive to the off-site archive within 30 days of receipt in	9

	the primary archive.	
DPAS459	The DPAS shall maintain an inventory of the contents of the off-site archive.	9
DPAS516	The DPAS shall generate a full-spatial-resolution color-composite browse image using three reflective bands of the L1 product, each re-scaled from 16-bit to 8-bit by a means that preserves the dynamic range of valid data and seasonality.	5
DPAS1006	The DPAS shall generate a full-spatial-resolution browse image using one thermal band of the L1 product, re-scaled from 16-bit to 8-bit by a means that preserves the dynamic range of valid data and seasonality.	5
DPAS515	The DPAS shall generate reduced-resolution browse imagery from reflective bands.	5
DPAS1007	The DPAS shall generate reduced-resolution browse imagery from one thermal band.	5
DPAS565	The DPAS shall provide a web-based registration interface.	16
DPAS566	The DPAS shall allow users to register and enter all required registration information.	16
DPAS567	The DPAS shall assign a role to each registered user profile.	16
DPAS568	The DPAS shall utilize the roles assigned to user profiles for allowing or restricting access to information, ordering options, products, collections, and functionality.	16
DPAS569	The DPAS shall allow users to modify their profile.	16
DPAS570	The DPAS shall provide a profile maintenance interface.	16
DPAS571	The DPAS shall encrypt user profile information.	16
DPAS1064	The DPAS shall provide the general public with non-discriminatory access to standard data products.	17
DPAS478	The DPAS shall allow the general public to search inventory holdings.	17
DPAS479	The DPAS shall provide a method for users to export scene metadata in bulk or large volume.	17
DPAS483	The DPAS shall provide a subscription service for notifying users when new products are available that meet the user specified search criteria	17
DPAS484	The DPAS shall provide a Geographic Really Simple Syndication (GeoRSS) feed for notifying users when new products are available.	17
DPAS485	The DPAS shall provide a CPF/BPF RSS Subscription Service for notifying users when new calibration or bias parameter files are available.	17
DPAS488	The DPAS shall be capable of handling OGC standard map Web Map Service (WMS) requests for delivery of browse imagery.	17
DPAS489	The DPAS shall be capable of handling OGC standard map Web Coverage Service (WCS) requests for delivery of standard products.	17
DPAS490	The DPAS shall support 20 simultaneous OGC WMS requests.	17
DPAS491	The DPAS shall support 4 simultaneous OGC WCS requests.	17
DPAS492	The DPAS shall deliver a WMS request for browse data (up to 1024	17

	x 1024 pixels) to a requester within 5 seconds of request.	
DPAS493	The DPAS shall deliver a WCS request for a 1024 x 1024 pixel subset of a standard product to a requester within 5 seconds of request.	17
DPAS495	The DPAS shall include a map server for delivering vector and raster data.	17
DPAS501	The DPAS shall have the capability to create KML files.	17
DPAS503	The DPAS shall provide a download broker for handling download requests for standard products, full resolution browse (FRB), and quality band (QB).	17
DPAS507	The DPAS shall provide a configurable capability to limit the maximum number of simultaneous connections by a single user.	17
DPAS1051	The DPAS shall provide a configurable capability to limit the maximum number of simultaneous connections for all users accessing the LDCM ordering system.	17
DPAS508	The DPAS shall provide a configurable capability to limit the maximum distribution volume by a single user.	17
DPAS816	The DPAS shall allow users to check the status of an order.	17
DPAS521	The DPAS shall return a subset of results from the searchable inventory search, using any combination of search criteria, within two seconds.	17
DPAS522	The DPAS shall allow users to define an area of interest (AOI) for searching against the searchable inventory.	17
DPAS523	The DPAS shall ensure users requesting standard LDCM products are registered.	17
DPAS525	The DPAS shall support Internet Explorer, Firefox, and Safari.	17
DPAS526	The DPAS shall, at minimum, be capable of handling 15 requests per second with a load of 10 concurrent users.	17
DPAS529	The DPAS shall display vector, raster, and feature map layers.	17
DPAS530	The DPAS shall allow users to customize the map display.	17
DPAS531	The DPAS shall have the capability to overlay a reduced resolution browse image geospatially on the map display.	17
DPAS533	The DPAS shall allow users to enter a place name, street address, zip code, or path/row as input for searching against inventories.	17
DPAS535	The DPAS shall allow users to select from a list of data sets to search against.	17
DPAS536	The DPAS shall allow users to customize the list of datasets.	17
DPAS537	The DPAS shall allow users to perform geospatial queries.	17
DPAS538	The DPAS shall allow users to search based on the searchable inventory data element input.	17
DPAS539	The DPAS shall allow users to search against inventories using temporal schemes.	17
DPAS541	The DPAS shall allow users to set up a subscription for off-line searching against data sets.	17
DPAS543	The DPAS shall allow users to view a list of metadata results from searches executed against the searchable inventory holdings.	17

DPAS544	The DPAS shall display a browse thumbnail for each metadata record when a browse image is available for the scene.	17
DPAS546	The DPAS shall have the capability to toggle the display of browse overlay and image footprints within the Map Viewer.	17
DPAS548	The DPAS shall allow users to export metadata search results in KML.	17
DPAS549	The DPAS shall allow users to export metadata search results as Shape Files.	17
DPAS550	The DPAS shall allow users to export metadata search results in Comma Delimited format.	17
DPAS553	The DPAS shall have the capability for users to compare browse items.	17
DPAS555	The DPAS shall allow registered users to place orders for on-demand standard L1 products.	17
DPAS1002	The DPAS shall allow registered users to place orders for on-demand standard L0Rp products.	17
DPAS556	The DPAS shall have the capability to limit the number of on-demand orders a user can place.	17
DPAS559	The DPAS shall send the user an order confirmation email with all ordering information when an order has been placed.	17
DPAS591	The DPAS shall allow or restrict access to web pages and data downloads based on the role assigned to a registered user.	16
DPAS592	The DPAS shall provide a means for users to subscribe to one or more subscription feeds.	17
DPAS593	The DPAS shall provide a mechanism for product issue/anomaly feedback.	18
DPAS594	The DPAS shall provide a mechanism for suggestions for systems or product improvements.	18
DPAS949	The DPAS shall provide the user community with technical information that describes LDCM data, products, and systems.	18
DPAS950	The DPAS shall have the capability to distribute image processing source code, algorithms, and documentation to authorized users.	18
DPAS925	The DPAS shall disseminate information to users via a web interface for pre-launch, launch, and operational transition phases.	18
DPAS595	The DPAS shall provide website indexing for search engines.	17
DPAS596	The DPAS shall provide an interface for users to request and access calibration data files.	18
DPAS598	The DPAS shall post reports generated by the Cal/Val team.	18
DPAS599	The DPAS shall provide an interface for authorized users to request and access ancillary data.	18
DPAS600	The DPAS shall provide an interface for authorized users to request and access auxiliary data.	18
DPAS939	The DPAS shall provide International Cooperators with access to communication and scheduling products available from the LDCM Mission Operations Element (MOE) remote controlled repository.	18
DPAS582	The DPAS shall allow authorized users to submit a collection	19

	request.	
DPAS583	The DPAS shall require users to register before submitting a collection request.	19
DPAS926	The DPAS shall allow authorized users to submit an off-nadir collection request.	19
DPAS927	The DPAS shall allow authorized users to submit a priority collection request.	19
DPAS585	The DPAS shall generate a unique ID for each collection request submitted.	19
DPAS586	The DPAS shall send a collection request confirmation email to the user after a collection request has been submitted.	19
DPAS587	The DPAS shall allow authorized users to check on the status of their collection request.	19
DPAS588	The DPAS shall provide users with access to daily collection schedules.	18
DPAS789	The DPAS shall provide a data management capability for adding, deleting, and updating inventory records.	11, 14
DPAS573	The DPAS shall provide a searchable inventory capability for all imagery in the archive.	17
DPAS837	The DPAS shall provide the ability to retrieve bulk data from the database.	17
DPAS575	The DPAS shall respond to search and order queries from any data access tool or service within 2 seconds of the request.	17
DPAS814	The DPAS shall synchronize the searchable inventory when create, replace, update, or delete (CRUD) operations to the full inventory records occur.	11
DPAS474	The DPAS shall provide a capability for metrics capture, including data quality, data volumes, throughput, searches, data downloads, and availability.	13
DPAS843	The DPAS shall provide the capability for authorized users to perform ad-hoc queries.	13
DPAS847	The DPAS shall report calibration and validation statistics and results.	13
DPAS848	The DPAS shall report the volume of products generated.	13
DPAS849	The DPAS shall report product generation latency.	13
DPAS850	The DPAS shall report image processing throughput statistics.	13
DPAS851	The DPAS shall report storage and archive status and statistics, including operational status of components, usage, and available capacity.	13
DPAS852	The DPAS shall report data distribution statistics.	13
DPAS854	The DPAS shall report user registration statistics.	13
DPAS855	The DPAS shall report Customer Demographics statistics.	13
DPAS856	The DPAS shall report project website usage statistics.	13
DPAS857	The DPAS shall report data collection request statistics.	13
DPAS858	The DPAS shall report collection schedules.	13, 14

DPAS859	The DPAS shall report data quality statistics.	13
DPAS860	The DPAS shall report data acquisition statistics.	13, 14
DPAS861	The DPAS shall report cloud cover statistics.	13
DPAS862	The DPAS shall report ground network capture success rate.	13
DPAS941	The DPAS shall have the capability to receive mission data from the International Cooperators for archive data validation purposes.	24, 35
DPAS942	The DPAS shall have the capability to provide Mission Data to the International Cooperators for archive validation purposes.	25
DPAS943	The DPAS shall have the capability to receive Mission Data from the International Cooperators for archive data exchange purposes.	24, 34
DPAS944	The DPAS shall have the capability to provide Mission Data to the International Cooperators for archive data exchange purposes.	25
DPAS945	The DPAS shall have the capability to receive product data from International Cooperators for product data validation purposes.	24, 35
DPAS947	The DPAS shall have the capability to receive metadata from the International Cooperators.	26
DPAS948	The DPAS shall have the capability to provide metadata to the International Cooperators.	17, 18
DPAS951	The DPAS shall have the capability to receive IC ground station communication messages from International Cooperators for things such as ground station availability, reporting observatory issues, and station description information.	24
DPAS835	The DPAS shall provide the ability to bulk load IC metadata into the inventory.	26
DPAS12	The DPAS shall use the Système International (SI) units for interfaces; the usage of any other unit(s) other than the SI shall be clearly communicated and documented.	3, 4, 6, 7, 21, 22

Scenario Reference (DOORS)	DPAS OCD Scenario
1	Processing (section header*)
2	5.2 Standard Processing (section header*)
3	5.2.1 Ingest Subsystem Mission Data
4	5.2.2 Standard Product Generation
5	5.2.3 Browse Generation
6	5.3 On-Demand Processing
7	5.4 Mission Data Reprocessing
8	5.5 Data Management (section header*)
9	5.5.1 Archive Management
10	5.5.2 Storage Management
11	5.5.3 Data Manager Interaction
12	5.6 Reporting (section header*)
13	5.6.1 Metrics Reporting
14	5.6.2 Collection Reconciliation

15	5.7 User Portal Subsystem (section header*)
16	5.7.1 Registration
17	5.7.2 Search & Order
18	5.7.3 Information Dissemination
19	5.7.4 Collection Request
20	5.8 Calibration Validation Operations (section header*)
21	5.8.1 Calibration/Validation (Cal/Val) Processing
22	5.8.2 Calibration Parameter Generation
23	5.9 International Cooperators (ICs) (section header*)
24	5.9.1 Exchange & Validation Data Ingest Subsystem
34	5.9.2 Exchange Data Processing
35	5.9.3 Validation Data Processing
25	5.9.4 Exchange Data Distribution
26	5.9.5 Metadata Ingest Subsystem
27	5.10 Anomaly Resolution (section header*)
28	5.10.1 Ingest Subsystem Error Recovery
29	5.10.2 Product Generation Error Recovery
30	5.11 Continuity of Operations (section header*)
31	5.11.1 Data Recovery
32	5.11.2 System Recovery
33	5.11.3 Routine Backups
36	Policy (section header*)
37	Policy / Security – applies to all scenarios

* - section header numbers appear in DOORS, but do not represent specific scenarios and have no requirements traced to them.